JUNG PUMPEN COMPLI

10 /2	10 /2	120/2		
300				
400	400			
0 /2	0 /2	20/2		
10/4	1 /4	2 /4	2 /2	3 /2
100 /2	100 /2	1020/2	1010/4	
1010/4	101 /4	102 /4	102 /2	103 /2
1210/4	121 /4	122 /4	122 /2	123 /2

DE [illegible]

EN [illegible]

FR [illegible]

IT [illegible]

NL [illegible]

PL [illegible]

CZ [illegible]

SK [illegible]

HU [illegible]

RO [illegible]

ZH

EINSATZ

Die eckige flexible Fekalienhebeanlage compli LGA Basic dient zur Entsorgung von Abwässern ohne fäkalienhaltige Anteile - wie z.B. aus Duschen, Waschbecken, Waschmaschinen und Geschirrspülern.

Die Behälter sind begehbar und eignen sich für Höhen bis 2 WS und einen Dauerbetrieb von 7 Tagen.

Die Steuerung ist nicht begehbar, aber spritzwassergeschützt nach IP 44.

Bei ordnungsgemäßer Installation und bestimmungsgemäßer Einsatz erfüllen die Steuerungen die Schutzanforderungen der EMC-Richtlinie 2014/30/EU und sind für den Einsatz in häuslichen Bereichen sowie Gewerbegebieten geeignet. Bei Anschluss an öffentliche Kanalisationen müssen Rückstauebenen eingehalten werden (z.B. nach EN 12056).

Beim Einbau der Anlagen sind die jeweiligen gültigen Gesetze, Vorschriften und die örtlichen Bestimmungen einzuhalten, wie z.B.

- Abwasserhebeanlagen für die Gebäudeentwässerung (z.B. nach EN 12050 und 12056)
- Elektrische Niederspannungsanlagen (z.B. nach DesignNorm VDE 0100)
- Sicherheitsbestimmungen (z.B. nach BetrSichV und BGR 500)
- Sicherheitsbestimmungen (z.B. nach GUV-V C5, GUV-R 104, GUV-R 126)
- Elektrische Anlagen und Betriebsmittel (z.B. nach GUV-V A3)
- Folgende Normen: EN 60079-0, EN 60079-1, EN 60079-14, EN 60079-17 und EN 1127-1

Lieferumfang

- Behälter inkl. Pumpe(n) und Kunststoffschacht für den Zulauf
- Reduzierstück DN 150 / DN 100 für compli 500 und 1000
- Überschiebmuffe für die Lüftung (compli 1200 entsprechende Vorbereitung ist Schere)
- Abschraubschacht für die Rückstauebene
- Steuerung(en) für die Hebeanlage
- Befestigungsmaterial für den Behälter
- Rückschlagkappe für die Rückstauebene (compli 300, 500, 1000 und 1200)
- Steuerung (nicht compli 300)

Betriebsart: Aussetzbetrieb S3, siehe techn. Daten

EINBAU

Die Hebeanlagen müssen auf tragfähigem und frostfreiem Untergrund eingebaut werden. Nebenstehende Teile müssen bei Arbeiten in Tiefen über 60 cm Böschungsbreite berücksichtigt werden.

Lüftung: Die Lüftung muss über Dachgefälle geführt werden.

Zulauf: Zulauf für den Behälter mit Schwerkraftschieber anschließen.

Rückstauebene: Hinter der Rückschlagkappe in der Rückstauebene ein entsprechendes Schwerkraftschieber anschließen. In die Rückschlagkappe ist eine Lüftungsbohrung eingebaut, die nicht entfernt werden darf.

Für die Entlüftung der Anlage ist ein Peilrohr vorgesehen.

ACHTUNG! Alle Schrauben, die zur Befestigung dienen, dürfen nicht entfernt werden. Dichtheit ist nicht gegeben.

Montage Behälter

Der Schieber im Zulauf (Zubehör) schließt, wenn Wasser eintritt und die Maschine hinterläuft.

compli 300. Der gerade Zulauf DN 100, welcher die beiden Lüftungsanschlüsse 102 der Maschine gegenüberliegt. Der beiliegende Kunststoffschacht ist die Sicherheitsbauteile Zulauf geschlossen befestigen.

Die Wickelkappe verschließt die Ausgänge der Behälterschalter und die Ausgänge für Schwimmer und Scheibe. Bei der Maschine

Jeder Kanal der Kunststoffschieber ist die Schalter und Scheibe Bedienungsanleitung.

Alle anderen compli. Hebeanlagen in Kunststoffschieber Anschlussdatenschieber.

Seitlicher Zulauf DN 150 geöffnet, Kunststoffschieber eine Lüftung 152 der Maschine geöffnet und entsprechend Lüftung. Die Stabilität Zulauf Verschlusskappe (Zubehör) Schieber und Einschaltniveau Zulauf geöffnet.

Hinweis. Bei compli 500 und 1000 kann Zulauf DN 150 auf DN 100 reduziert werden, entsprechend beiliegende Reduzierstück in Kunststoffschieber eingesetzt.

Die Sechskantschraube der Kunststoffschieber festziehen.

Löcher für die Befestigung des Behälters anzeichnen.

Schieber des Behälters durch Behälterwand führen.

ACHTUNG! Die Schraube nicht festziehen, da sich der Behälter sich beschädigen die Gefahr einer Undichtigkeit.

Bei der Anlage der Baureihe compli 1200 und der Behälter sich nicht in einer Wiese befestigt.

Montage Lüftung

Die Lüftung in der Überschiebmuffe DN 70 mechanisch Behälter anschließen und durch Dachfläche.

Bei der compli 1200 der beiden mechanischen Steuerungen 78 mm von Maschinengrundplatte. Jeweils die Lüftung in der entsprechenden Vorbindung DN 70 anschließen und durch Dachfläche.

Montage Druckleitung

Auf der Abgangsfläche:

1. Rückschlagkappe (nicht Lieferumfang)
2. Abschieber (Zubehör)
3. Anschlussstück
4. in entsprechende Vorbindung die Rückschlagkappe in Schleife durch die örtliche Rückstauebene führen.

Anschluss DN 50 vertikel zur Notentsorgung

Dieser Anschluss ist Anschluss einer Handpumpe gedacht.

Der Stopfen an der Maschine ist eine Lüftungsöffnung.

Die Stabilität der Verschlusskappe (Zubehör) Schieber und Einschaltniveau Zulauf geöffnet.

Die Steuerung 58/50 einschließen.

Zulauf ist Anzeige 50 durch die Steuerung in Behälter schließen. Die Absaugung Behälter über 50 beginnt.

Die Handpumpe eingeschaltet ist die Wandbefestigung ist einer geschlossenen Rückschlagkappe und die Handpumpe anschließen. Anschließend ist Schleife durch die örtliche Rückstauebene geführt.

Zusatzzulauf DN 50 horizontal

Die vorgefertigte Nische für den seitlichen Zulauf ist eine Lochscheibe geöffnet und die Öffnung.

Die Steuerung 58/50 einschließen.

Zulauf ist Anzeige 50 durch die Steuerung in Behälter schließen.

ACHTUNG! Die Anschlüsse einzugeben der jeweilige seitliche Zulauf die compli

Externer Alarmsummer (Zubehör)

K ich d S e g ff e .

A de K e "S+" d "S-" ka ei ich , e a ak i ch 12 VDC-Sig a geb i ei S a f ah e . 30 A a ge ch e de . D i e A ka ah ei e ei - d a ge cha e ei .

Bei d c i 300 ka ei e abh i-g A a Z beh i e de , ei M age cke i a Beh ha de .

Bei Doppelanlagen: Externe Blitz- oder Warnleuchte (Zubehör)

230Vz Le ch e (a .1A) a K e N d 41 a ch ie e .

I ie e ah cke K e Uz ach 40 ege . D S k ei i d ch F1 abge-ich .

Die S eck cke "BRX2" ie f g ei e e :
B i e ch e: abge ge (=)
W e ch e: a fge eck (_ _ _).

Handbetrieb

De Wi cha i die S e g "Ha d" i ge . Die P e bei e abh - gig Ab a i ea Da be ieb. Da Ab e e de ha b d ch die Rei-ig g ff g be bach e de .

Stillsetzen

Wi cha i die S e g "0" i ge , die P e i i ge e . Die A a age i ei be ieb be ei .

F Re a - d W g - bei e a S e g d P e ich die S e g "0" be e , d i Ne eck a d S eck-d e iehe .

Inspektion

Z E ha g d Be ieb ich hei i a ich ei e Sich k e d A age ei ch ie ich d R bi d ge - ehe .

Abge e La f d k e ch fe Ka e habe .

5. k e, f d iche fa achf - e d ech e (e ka e - ha de).
6. I e ei ig g de Beh e (bei Bed f b . ach e ie e E f d i e) .B. Fe e fe e .
7. P fe de Z a de de S e beh - e .
8. A e 2 Ja e D ch e d A age i Wa e .
9. P fe de e ek i che Tei d A age. Die S e g e b i a g f ei, e a di g ei Akk ei geba ei , i e ege ig a f F k i - higkei k ie e . Da bei a - g A age de Sch i e Beh a hebe , bi ei H ch a e - a e . A e d i d Sch i - fa f d ich ei ige .

Nach E edig g d W g bei e i die A age ach D chf g ei e P be-a fe ied 1024 574DIC (-ITj ET EMIC a bei a

BETRIEB

Probelauf und Funktionsprüfung

1. Rei ig g decke a Beh ff e .
2. Schieb i Z a f- d D ck ei g ff-e .
3. A age a S a g ege , D ehfe ich-g a eige beach e .
4. Beh e bi Ei cha i ea f e .
5. P e cha je ei d e e de Beh . P ga g d ch die Rei i-g g ff g be bach e .
6. Sch i e d Ni ea-Scha g Ha d a g a be de Ei cha k hi a a hebe , bi die A a age a .
7. Rei ig g ff g ied i Decke d Dich g ch ie e .
8. A ha d e e Scha ie e die Dich igkei de Beh , d A a e d d R ei ge fe .

Automatikbetrieb

D A a ikbe ieb i d a e A a-ge be ieb. Hi d Wi cha i die S e g "A a ik" geb ach de . D ch die i e ie e Ni ea cha g i d die P e e eche d d F igkei - a d Beh ei - d a ge cha e. D Be ieb d P e (bei c i 300 Be-ieb be ei chaf) i d d ch ei e e Le ch di de a ge eig .

ACHTUNG! Bei a ah ei e e Z-f e ge (.B. P e g) i d Schieb i Z a f ei e , da die Hebea age a ch ei hi a e Scha be ieb bei e (kei Da a f, be eh be hi g gefa de P e -).

WARTUNG

Wi e feh e die W g ach EN 12056-4 eh e .

U ei e da haf e Be ieb ich hei lh A age ge ei e , feh e ei-e W g ag ab ch ie e .

Die W g d F ka ie hebea - age d Ma ah e I a d-ha g i d Fachk dige i Ab de 3 M a e i Ge bebe ie-be , 6 M a e i Me fa i ie h e d 12 M a e i Ei fa i ie h e d ch f e .

V jed A bei de Ne eck d A age iehe d ich e e , da die A age a d e P e - e ich ied S a g ge e - de ka .

S eck d G i ch a ch ei-g a f echa i che d ch i-che Be ch dig g fe . Be-ch dig e d gek ick e Lei ge e e de .

Wi e feh e bei d W g f ge de A - bei e eh e :

1. P fe d V bi d g e e a f Dich-igkei d ch Ab che de U fe de A age d A a e .
2. Be ige d Schieb ; P fe a f eich-e Ga g, gegebe e fa ach e e d ei fe e .
3. ff e d Rei ige de R ckf - hi d ; K e Si d K ge (K a e).
4. Rei ige d P e d de i e be a ge ch e e Lei g be eich ; P - fe de La f ade d d Lag g.

k a e 22 bi 46 e de , .B. N
ESSO de DTE 22, DTE 24, DTE 25 M bi .

Die F e ge be . g 380 Ø bei de M -
iC -P , e UC 08/2 M d 25/2 M d
1000 Ø bei de M iF ee-P e 25/2
BW d 35/2 BW.

Die k a e de f i de a gegebe-
e e ge gef de . Ei be f e
f Z e g de P e.

Kontrolle des Schneidspaltes

(Gi f Sch ei ad e). Die Geh -
e ch a be de P e' ie die Ve bi -
d g - d Befe ig g ch a be de l -
a a i i d a f fe e Si k e ie e
d gegebe e fa ach ie he .

Bei ab eh e de F de]TJ ET EMC 0.1(de F(8 e)]TJ 0.C /S a /MCID 1009 BDC T /T1_1 1 Tf -0.044 T 8 202.1039 612.86

AREAS OF APPLICATION

The ead c ec cl i e age if i g
a i e LGA ce ified a d e ab e f
he di a f a e a e f ie a d
i a , a dd e ic a e a e c ai i g
he a i ie .

The a k ca h a d h e i a
de h f e ha 2 f a e a d a
h e i e id f 7 da .

The c ca h a d h e -
i , b i a h- f i acc da ce h
IP 44.

If i a ed i cl ia ce h he eg a-
i a d ed e , he hi c
i h ee he ec ie e hi e e f
he EMC Di ec i e 2014/30/EU a d i ab e f d e ic e a d c ec i a
e h f he id. Whe c ec ed
a i d ia ai i hi a id ia
e a i h e ided b a
cl a - high- age a f e , i -
fficie l i i e fe e ce ha be
e ec ed.

Whe i g he h , he e e a a i a
a eg a i a d i a i be
adhe ed , f e :

- Se age di a i f b i di g a d
d ai age (e.g. EN 12050
a d 12056 i E e)
- I a i f age (e.g.
VDE 0100 i Ge a)
- Safe a d ki g a e ia (e.g., Be-
SichV a d BGR 500 i Ge a)
- Safe i a e a e (e.g., GUV-
V C5, GUV-R 104 a d GUV-R 126 i Ge -
a)
- E ec ica (e.g., GUV-V A3 i Ge a)
- F i e ec i EN 60079-0,
EN 60079-1, EN 60079-14, EN 60079-17
a d EN 1127-1

Scope of supply

- Ta k h ( ) a d c a f a ge f
i e
- Red ce DN 150 / DN 100 f cl i 500
a d 1000
- Si - cke e i e f e ia i e
(cl i 1200 f ib e c ec i h
h ec a)
- C ec i f a ge f e e i e
- F ib e c ec i h h ec a f
he e e i e
- P g-i ea ( ) f he dia ag ha d
h addi i a DN 50 i e
- Fi i g a e ia f a k
- N e a e f he e e i e
(cl i 300, 500, 1000 a d 1200)
- C (cl i 300)

Mode of operation: intermittent operation

e back-, he i e i e be e ed a i highe i . The e i a i i e ca be c ec ed i he a k e i a i .

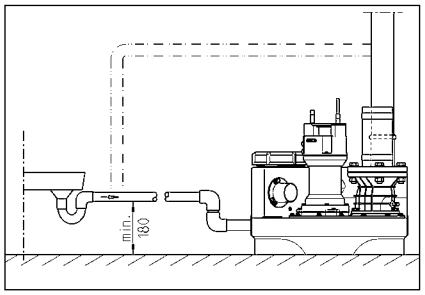

ELECTRICAL CONNECTION

O a ified e ec icia a ca e ec ica k he he c .

Bef e c i g a k, he ai g a d e e ha he e he i ca be i ched agai b a e e e.

ATTENTION! Ne he ai g i a ! If a ge i he g, hi ca ca e a f c i a d d age.

The a d d a icab e i each ca e (e.g. EN), he c - ecific eg a i (e.g. VDE i G a), a d he eg a i f he ca e k a be b- ed.

Ob e he a i g age (ee he e a e)!

The i ha e a e e c e ha i ch- e he a d ff de e di g he e - e f he a . A i e a ed a e bee if he e i a a f c i , e e if hi i e .

If he he a , he c d e he i di g he a . Af he he a ha i ched ff he e , he ai g bef e e ed i g he fa , i ce he de ice ca i ch i e f agai a ica if he i i c - ec ed. A ec a f c i e age i ge a ed.

Alternating current (AC) units

O c ec he e ec ica cke ha ha e bee i a ed i a , ab e he back e e , i acc da ce i h he eg a i , a d e fi ed i h a ea a 16 A (de a) f e.

Three-phase current units

F he e ec ica c ec i f he e age di a i , a fi e e CEE e cke i e i ed. Thi e be ca ed i a ab e he back e e (3/N/PEz230/400 V).

Attention! O -b f e a a- ic f e i h C ch ac i ic e be ed a e-f e f he .

Installing the control unit (not compli 300)

O a e he c i i ab e he back e e , a d kee he h i g c ed a a i e . The c i be ea i acce ib e e ab e i be checked a a i e. High h idi a d c de a i ca de he c !

Switching levels

The i ch- a d i ch- ff i ha e bee fac e f he a d d i e heigh f he i i .

If e ec a diff e i e heigh , he edefi e he i ch- i (c - i 300) a he i e back e e a c- c i he i e.

The he i chi g i f he a (+2) a d, i he ca e f d e i , eak ad (+4) e he e e a a ica b he c i .

Redefining the switch-on level (not compli 300)

Sh d he e a i a d e he Ma a -0-A a ic i ch 0 . The i ch- i ca be adj ed ia he a a- g e e a a K1 d e he igh- ha d ide i he c i . Re e he a e c f he d e a i .

O he a a g e e a a he e e ee LED , abe ed P1, P2 a d P3.

- P1 = Diag i f c i
- P2 = Wa e e high ha i ch- i g ff heigh b i ha i ch- i g heigh
- P3 = Wa e e ha eached i ch- i g e e

Fi he c ec i ch b i h a he b edge f he i e i g. O P2 h d be i . If P3 i a i , a eadj e be ade.

T he a adj i g e be ea h P1, gi i g i e f c ck i e. The ake he f a i ch, h e i be he i ch- ff i i he ch b a d a i f a agai . If P3 i i , gi e he ad- j i g e a he f c ck i e a d h e ge he f a i ch agai .

Re ea hi ced e i P3 i g i , he he adj i g e ef back i he a ic ck i e ec i i he e ac i he e P3 igh agai . The i ch- i ha he bee e .

Alarm system

Ma f c i e age e gi e b h i- ca a e a ac ica . The a d d ai -de e de a e e e - fa i he ed LED, AD 00 c i 300). A he e e a b i -i ac ic a d . Thi ac ic ig a ca be ed ff b e ed i g he fa b a deac i a i g i .

If a ac ic ig a d be i a ia e a he i a a i e i e i , a a ig a ca be e a ed ia he e ia f ee c ac (i a 40 a d 41) he c i b d (i he g i he ca e f c i 300). The e ia f ee c ac f he ce a i ed a ca be aded i h a a i f 5 A / 250 VAC. The c ac e af he fa ha bee e edied.

Battery pack for alarm system (not compli 300)

The a de ice i ai -de e de i i a d d i , i.e. i i ib e ig- g a high- a a i he e e f a - fai e. T e ab e he a de ice k e e if he e i a fai e, a ech ge- ab e ba ack be ed. O e he a e c . C ec he ba ack he c ec i c i , a d e he e i i g cab e ie a ach i he i e ded i i (G1) he PCB. The ba ack ca - he a e i h f ab 1 h i ca e f a e a .

Af e e f he ai age, he ba- ack i ch ged agai a a ica . A ba i ead f a i hi a . 24 h i . I i f ch ged af ab 100 h .

Check he f c i f he ba ack a eg i a ! T d , di c ec he i f he ai a d igg a high- a a . The e f he ac ic ig a bec e ig ifica e a i d f e a i e . The ice ife i ab 5 e . N e he i i da e he ba ack a d af fi e e he ba ack h d be e aced a a eca i ea e.

O e a 9V ech geab e ba ! If -ce ba ie e e ed he e i a da g f e i !

Time meter

A i a i e e ca be fi ed i he c i (c i 300). T d , h e he c ec i f he i e e a . 8 a d i he i he f cke a ca i BSZ he i ed c i b d. If he e i i e e i dica i af i chi g he i agai a e he i e e h gh 180 .

Shutting down the internal alarm buzzer

N c i 300. Re e he ea ed j (BRX/BRX1). T e e he j f ge- i g , a ach i a i f he - e i c ec .

External alarm buzzer (accessory)

O e he a e c he c i .

A addi i a e a e ac ic 12 VDC ig- a a i h a c e c i f e ha 30 A ca be c ec ed i a S+ a d S- . The i a a b ca ei he be i ched ff.

I ͵he ca´e f c͵ i 300, a͵ ai ´-i de e - de ͵ a ͵ de ice ca be fi͵ ed a´ a acce´- ´ . Th͵ e i´ a͵ ͵ i g ba´e ͵he ͵ a k f͵ ͵hi´ ͵ ´e.

In the case of duplex units: External 230V~ flashing light or warning light (accessory)

C ec͵ a 230Vz ͵ (1 A͵ ͵ .) ͵ ͵ i a´ N a d 41.

La a i ´ ͵ a͵ ed ͵ i e ͵ idge ͵ f ͵ ͵ i a Uz ͵ ͵ i a 40. The e ec͵ ic ͵ i c͵ i ´ ͵ - ͵ ec͵ ed b F1.

Se͵ J͵ ͵ BRX2 a´ f ´:
F a´hi g igh͵ i͵h ͵ BRX2
(C ͵ i ͵ ͵ ´ ===)
W͵ i g igh͵ i͵h BRX2
(F a´hi g (_ _ _)

OPERATION

Test run and functional check

1. O e ͵he͵ ai ͵e a ce c ͵ f͵he ͵ a k.
2. O e ͵he ´h͵ - ff a e´ i ͵he i e͵ a d ͵he ͵ e´´͵ e i e.
3. C ec͵ ͵he ͵ i͵ ͵ ͵he ͵ ´ ͵ a d b´͵ e ͵he i dica͵ i f͵ ͵he͵ ͵ a͵ i g fie d ͵ ec͵ i .
4. Fi ͵he ͵ a k ͵ ͵ ͵he ´ i͵ch- e e .
5. The ͵ i ´ i͵ch a d ͵ ͵he ͵ a k. Ob´͵ e ͵he ͵ i g ͵ ce´´ ͵ ͵ gh ͵he͵ ai ͵e a ce e i g.
6. Li͵ ͵he f a͵ f͵he e e c ͵ ͵ ´ b ha d ͵ i i͵ i´ ab e ͵he ´ i͵ch- i ͵ a d h d i͵ ͵h͵ e ͵ i ͵he a ͵ i´ ͵ igg͵ ed.
7. The c ´e ͵he͵ ai ͵e a ce e i g i͵h ͵he c ͵ a d ´ea .
8. Check ͵ e ´ ͵ e ͵ha ͵ ͵he ͵ a k, fi͵ i g´ a d i e´ ͵ e a͵ ͵ igh͵ , b c͵ i g ͵ ´e - ͵ a ´ i͵chi g ͵ ´.

Automatic operation

A͵ ͵ a͵ ic ͵ a͵ i i´ ͵he ͵ ͵ a ͵ a͵ i g ͵ de f͵he ͵ i͵. The ͵ ck͵ ´ i͵ch ͵ ͵ be ´e͵ ͵ A͵ ͵ a͵ ic . The i ͵ ͵ a͵ ed e e c - ͵ ͵ ´ i͵che´ ͵he ͵ a d ff de e d- i g ͵he a͵ ͵ e e i ͵he ͵ a k. A ͵ ee LED igh͵ ´ ͵ he ͵he ͵ i´ ͵ a͵ i g (i ͵he ca´e f c͵ i 300 ͵he i͵ i´ ͵ ead f͵ ͵ a͵ i).

Attention! If ͵ ͵ ´ ͵ a ͵ ge ͵ ͵ a ͵ i͵ ie´ f a´ ͵ e a͵ ͵ f i ͵ ͵he ͵ i͵ (e.g. he a i´ ͵ ai ed), ͵ a͵ ia c ´e ͵he ´h͵ - ff a e a͵ ͵he i e͵ ͵ i ͵he ͵ i͵ ca ͵ a͵ e ͵ ͵ a agai , ´ i͵chi g a d ff, (͵ ͵ i g c ͵ i ͵ ͵ ´ , ´i ce ͵hi´ c ͵ d ͵ - he a͵ ͵he ͵ ͵ ͵).

Manual operation

Se͵ ͵he͵ ck͵ ´ i͵ch ͵ Ha d . The ͵ i ͵ a͵ e ͵ a e ͵ a d i de e - de ͵ f͵he a´ ͵ e a͵ ͵ e e . The ͵ i g ͵ ͵ a͵ i ´h ͵ d ͵h͵ ef͵ e be b´͵ ed ͵ ͵ gh ͵he͵ ai ͵e a ce e i g.

Shutting down

Se͵ ͵he͵ ck͵ ´ i͵ch ͵ 0 . Thi´ ´h͵ ´ d ͵he ͵ . The a ͵ ´ ´ ͵ ͵ ͵ ai ´ ead f͵ ͵ a͵ i .

D ͵ ͵ ´e ͵he ´i͵ i 0 f͵he ´e ec͵ ´ i͵ch f͵ ͵ e ͵ ai a d ͵ ai ͵ e a ce ͵ k ͵he c ͵ a d ͵ , b͵ a a ´ ͵ g ͵he ͵ i͵ f ͵ ͵he͵ ai ´.

Inspection

T ͵ ai ͵ ai ͵ a͵ i a͵ e iabi i͵ , c͵ ͵ a i´ ͵ a i ´ ec͵ i f͵he ͵ i͵, i c ͵ di g ͵he i e c ec͵ i ´, ce a͵ ͵ h.

MAINTENANCE

We͵ ec͵ ͵ e d ͵ha͵ ͵ ´ ͵ ice ͵he e͵ ͵ i - ͵ e ͵ i acc͵ da ce i͵h EN 12056-4.

T e ´ ͵ e c ͵ i ͵ ed͵ e iabi i͵ f ´ ͵ ice, e ͵ ec͵ ͵ e d ͵ha͵ ͵ ͵ ake ͵ a ´ ͵ ice c - ͵ ac͵.

The ͵ ai ͵ e a ce f ͵he ´e age if͵ i g ´ ͵ a͵ i a d ͵ ai ͵ e a ce ͵ ea´ ͵ e´ ͵ e c͵ ied ͵ b ´ e- cia i´ ͵ a͵ i ͵ a ´ f 3 ͵ h´ i c͵ ͵ ͵ - cia ͵ ͵ i´e´, ͵ ͵ i-f͵ i h͵ e´ i 6 ͵ h´ ͵ 12 ͵ h´ i f͵ i h͵ e´.

Bef͵ e c͵ i g ͵ a ͵ k´: di´- c ec͵ ͵he ͵ a d ͵he c ͵ ´ ͵ f ͵ ͵he͵ ai ´ a d ͵ake ´ ͵ e ´ ͵ e ´ ͵ e ͵ha͵ i͵ ca ͵ be ͵ ͵ gi ed agai .

Check ͵he cab e f͵ ͵ echa ica ͵ ch͵ ica d͵ age. A d͵ aged ͵ ki ked cab e͵ ͵ ´ be͵ e aced.

We͵ ec͵ ͵ e d ͵ha͵ ͵he f i g ͵ k´ be i c ͵ ded i ͵he ´ ͵ ice:

1. Check ͵he c ec͵ i i ͵ ´ f͵ a͵ ͵ - ͵ igh͵ e´´ a d i ´ ec͵ ͵he ͵ ea´ ´ ͵ - ͵ di g ͵he ͵ i͵ a d ͵he fi͵ i g´.
2. O ͵ a͵ e ͵he ´h͵ - ff a e´ a d check ͵ha͵ ͵he ͵ e ea´i . Adj ͵ ´ a d ͵ ea´e ͵he if ece´´ ͵ .
3. O e a d c ea ͵he ´ i g- ͵ e check a e; check ͵he ´ea͵ a d ba (a e)
4. C ea ͵he ͵ a d ͵he i e´ h͵ e ͵he c ec͵ ͵ ͵he ͵ i͵; check ͵he ͵ e ͵ a d ͵he be͵ i g´.

W͵ ͵ i e ͵ ´ ca ha e ´h͵ edge´.

5. Oi check. If ece´´ ͵ ͵ ͵ ͵ cha ge i (if i ch͵ be ͵ a ai ab e).
6. C ea ͵he i ´ide f͵he ͵ a k (a´ ece´´ ͵ , ͵ if e´ ecia ͵ e͵ ͵ i ed); ͵ ͵ e a ͵ ea´e, f͵ ͵ e ͵ e.
7. Check ͵he c di͵ i f͵he c ec͵ i g ͵ a k.
8. F ͵ ´h ͵he ´ ´ ͵ ͵ ͵ gh i͵h a͵ ͵ ce e ͵ 2 e͵ ´.
9. I ´ ec͵ ͵he e ec͵ ica ´ec͵ i f͵he ͵ i͵. The c ͵ ͵ i͵ i´ e f i´ ͵ ai ͵ e a ce- ͵ f ee, b͵ if a͵ ech͵ geab e ba͵ ͵ i´ fi͵ - ͵ ed, ͵he i͵ ´h ͵ d be checked͵ eg ͵ ͵ e ´ ͵ e ͵ha͵ i͵ i´ i g d ͵ ki g ͵ d͵ . T d ´ , ͵ ͵ g ͵he ͵ i͵ f ͵ ͵he͵ ai ´ a d if͵ ͵he f a͵ f͵he e e c ͵ ͵ ´ b ha d a d h d i͵ ͵h͵ e ͵ i ͵he a ͵ i´ ͵ igg͵ ed. I addi͵ i , c ea ͵he f a͵ if ece´´ ͵ .

Whe a ͵he ´ ͵ ici g ͵a´k´ ha e bee ͵ - f͵ ͵ ed, c͵ ͵ ͵ a͵ e´ ͵ ͵ a d ͵he ͵ ͵ ͵ i͵ back i ͵ ͵ a͵ i . The ´ ͵ ice ͵ ͵ be d c͵ ͵ e ͵ ed, gi i g de͵ ai ´ f͵he i͵ ͵ a ͵ da͵ a a d f a ͵he ͵ a´k´ c͵ ied ͵ .

Oil check

(O a ie´ f͵ ͵ i͵ ´ 08/2, 25/2 a d 35/2). Fi ´ ͵ f a , ͵ ´ ͵ e ͵he he ag ´ ͵ e ´ ͵ A e ´ ͵ e ´ ͵ ͵ d ͵he ͵ a d if͵ ͵he ͵ a d i͵ e ͵ ff ͵he ͵ a k. The ͵ ai ͵ g i´ abe ed ͵ ´ . I ͵ d͵ ͵ check ͵he ͵ echa ica ´ea , ͵he i , i c ͵ di g a ͵ e´i- d ͵ e ͵ ͵ be ͵ ai ed ͵ f ͵ ͵he i͵ e´ ͵ i a d c ec͵ ed i a c ea ͵ ea´ ͵ i g c ͵ ai ͵ .

, If ͵he i i´ c ͵ ͵ i a͵ ed i͵h a͵ ͵ (i k), a i cha ge ͵ ͵ be c͵ ied ͵ . Check agai af͵ ͵ a f͵ ͵h͵ 300 - ͵ a͵ i g h ͵ ´, b͵ a͵ ͵he ͵ a͵ e´ af͵ ͵ 6 ͵ h´!

, H e ͵ , if ͵he i i´ c ͵ ͵ i a͵ ed i͵h b ͵h a͵ ͵ a d ͵ a ͵ ´, ͵he ͵ ͵he i ͵ ͵ ´ be͵ e aced, b͵ ͵he ͵ echa - ica ´ea a´ e .

F ͵ ͵ i͵ i g ͵he i ͵ e´ ͵ i , i͵ i´ a ´ ´´ ib e ͵ ͵ e͵ fi͵ ͵he e ec͵ de f ͵ DKG ´ea eak de͵ ec͵ i ace f͵he DKG ´ea - i g ´ ͵ e .

Changing the oil

(O a ie´ f͵ ͵ i͵ ´ 08/2, 25/2 a d 35/2). T e ´ ͵ e ͵ a͵ i a iabi i͵ , ͵he fi ´ i cha ge ´h ͵ d be c͵ ied ͵ af͵ ͵ 300 ͵ - a͵ i g h ͵ ´, i͵h f͵ ͵h͵ i cha ge´ c͵ ied ͵ af͵ ͵ e ͵ 1000 ͵ a͵ i g h ͵ ´.

If ͵he ͵ b͵ f ͵ a͵ i g h ͵ ´ i´ ͵ , a i cha ge ´h ͵ d ´ i be c͵ ied ͵ a͵ ea´ ͵ ce a e͵ .

If a´ ͵ e a͵ ͵ i͵h ͵ g a͵ a´i e c - ´ i͵ ͵ e ͵ ´ i´ bei g ͵ ed, ͵he i cha ge´ ´h ͵ d be c͵ ied ͵ a͵ c͵ ͵ e´ di g ´h ͵ ͵ i ͵ a ´.

U´e HLP h ͵ a͵ ic ͵ i ͵ a i , i´c ´i͵ c a´´ 22 ͵ 46, e.g. M bi DTE 22, DTE 24, DTE 25, ͵ ͵ e ace ͵he i i ͵he i ͵ e´ ͵ ͵ i .

The ͵ ͵ a͵ i͵ f i ͵ e ͵ ͵ i ed i´ 380 ͵ f͵ ͵he M ͵ iC ͵ ͵ ´ UC 08/2 M a d UC 25/2 M, a d 1000 ͵ f͵ ͵he M ͵ iF ee ͵ ´ UC 25/2 BW a d 35/2 BW.

The i ͵ e´ ͵ ͵ i ͵ a be fi ed i͵h ͵he ´ ecified ͵ a͵ i͵ f i . O ͵ fi i g i ͵ e´ ͵ i ͵he ͵ bei g ͵ e d ͵ ed i ͵ ab e.

Checking the cutting clearance

O f͵ ͵ ´ i͵h c ͵ i g ´ ´ ͵ . The h ͵ ´i g ´ ͵ e ´ f͵ ͵he ͵ , a d ͵he c - ec͵ i g a d fi i g ´ ͵ e ´ f͵he i ´ a͵ i ͵ ͵ be checked ͵ e ´ ͵ e ͵he ͵ e fi ed ´e- c͵ ͵ e . The ´h ͵ d be ͵ igh ͵ e ed if ece´´ ͵ .

If ͵he ͵ ͵ f͵ ͵ a ce de ͵ ea´e´, ͵ if

de ea e (he e d bec e b cked), he e a d c i g be checked f e b a e a d e aced if ece .

U i g a i ab e , e.g. fee ga ge, he c i g c e a ce be ee he c i g - a d he c i g a e ca be ea ed. A c i g c e a ce f 0.2 be ed ced.

Adjustment of the cutting clearance

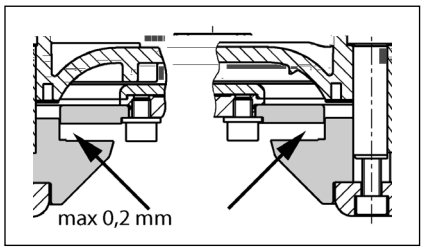

1. B ck he c i g i h a iece f d a d e he ce a he ag cke e .
2. Take ff he c e i iece, he c i g a d a adj i g a he a d he a- ach he c e i iece a d he c i g agai .
3. B ck he c i g a d igh e agai i h he he ag cke e (igh e i g e 8 N).
4. Check he feed f e e f he c i g a d he c i g c e a ce agai a . 0.2).

If he c i g c e a ce i i big, a f - he adj i g a he be ed. S e 1-4 be e ea ed.

QUICK TIPS FOR REMEDYING FAULTS

The unit isn't working

- Check he ai age, he f e a d he d fa c i i e . Re ace defec i e f e i h f e i h he e i a a e! If he f e igg agai , ca a a ified e ec icia c e ice.
- The i a 2 A g a be f e (de a) f he 230/12V c a f e , he - c ac a d he 230V AC e fa . Re ace defec i e f e i h f e i h he e i a a e!
- If he ai cab e i da aged, i a be e aced b he a fac e .
- If he f a i ch i b ced, c e he i e h - ff a e, e he ai e a ce c a d c e he b ckage.

If the alarm is triggered and the unit does not work:

- The he a i he i di g a ha e i ched ff he e beca e he i b ced. I hi ca e, c e he h - ff a e a he i e, d ai he a k, he ai g e e he d e, a d c e he b ckage.

Decreased pumping performance

- Check ha he h - ff a e i he e e i e i f e .
- If he e e i e i b cked, f h a e gh he e e i e c e i .
- If he e a e i b cked, e he e e i e a d c ea he e- a e.
- If he e i a i e i b cked, c ea he e i a i h e ha ead f he a k a d check he d i ed h e .
- If he i k a he i e i g, b bec e d d he e d, he a a ified e ec icia edefi e he i ch- ff i i he c - i .

Indicator "Drehfeld falsch" (Wrong rotating field) lights up

- Mai ha e e e ce i g ha e i ab e - h ab e de i . The ai c ec i be c ec ed b a a ified e ec icia .

Indicator "Störung Pumpe" (Pump failure) lights up (not compli 300)

- The i ec ed b a i e a ed c i - c i eak hich i che ff he if i ad if he e i a e ec iq fa . Af hi ha bee igg ed, he c i ha be e ed b a a i- fied e ec icia i d e e he e e b .

Indicator "Hochwasser" (High water) lights up (not compli 300)

- Wa e e i he a k high beca e f f a e e ce i e i f . Re e a b c i i he e e i e a d/ e i i a e he e ce- i e i f .

LED P1 on the analogue evaluator is permanently lit up (not compli 300)

- The e i a fa i he e e i g. Ca c e ice.
- The e i a e ef i he a k. Fi i h a a f a .
- N e: If he LED igh ief af he i g a i , hi i a ig f a a f c i .

Pump "snores" and does not switch itself off (not compli 300)

- The i ch- ff i f he i i .

U e he h ee fi i g e e he e - e i i g a he f f he c ec i g a k. B c ef a i g i he igh he i ch- ff i ca be e a high e e . Re igh e he e . The i ch- ff e e i eached d i g i g he he LED2 g e ff.

Attention! I a a be ece e e- adj he i ch- e e (ea e ef he ec i Redefi i g he i ch- e e).

N e: If he a i g i e i e- cei ed a i i e, he i ch- ff i ca a be e a high e e i hi a .

CONSIGNES DE SÉCURITÉ

ATTENTION!

Qualification du personnel

Travailler en étant soucieux de la sécurité

Consignes de sécurité pour l'exploitant/ l'utilisateur

Consignes de sécurité pour le montage, les travaux d'inspection et de maintenance

Transformation et fabrication de pièces détachées sans concertation préalable

Formes de service interdites

Consignes concernant la prévention des accidents

UTILISATION

Le [illegible] de [illegible] age [illegible] a [illegible] f ca [illegible] c [illegible] i [illegible] a ch [illegible] a [illegible] ifica i LGA de de c [illegible] c ie [illegible] a [illegible] e age de ea [illegible] e [illegible] e ace de [illegible] ie [illegible] e ea [illegible] i [illegible] ai [illegible] i [illegible] e de ea [illegible] e [illegible] d [illegible] e [illegible] i [illegible] e a ec e [illegible] [illegible] e [illegible] habi [illegible] e [illegible].

Le [illegible] c ec [illegible] [illegible] [illegible] [illegible] ib e a ec e ha [illegible] [illegible] [illegible] de 2 CE [illegible] [illegible] e de 7 j [illegible] a [illegible].

L [illegible] i de c [illegible] a de [illegible] e [illegible] a [illegible] [illegible] ib e [illegible] ai [illegible] e [illegible] [illegible] g e c [illegible] e e [illegible] jec i [illegible] dea [illegible] e IP 44.

P [illegible] [illegible] e i [illegible] a ai [illegible] g a [illegible] ai e [illegible] [illegible] e [illegible] i [illegible] a i c f [illegible] e, [illegible] i de c [illegible] a de [illegible] d a [illegible] ige ce de [illegible] ec i de a di ec i e EMC 2014/30/EU [illegible] c ie [illegible] [illegible] e i [illegible] e [illegible] i e habi [illegible] a i did e a ec [illegible] e c e i [illegible] [illegible] ea [illegible] ec i [illegible] e [illegible] bic. E ca [illegible] de [illegible] a ch [illegible] e [illegible] [illegible] [illegible] ea i d [illegible] ie a [illegible] ei d [illegible] e [illegible] i [illegible] a i i d [illegible] ie e a ec [illegible] e ai e [illegible] a i [illegible] ec i [illegible] e [illegible] e ace d [illegible] [illegible] e [illegible] a f [illegible] a [illegible] ha [illegible] e [illegible] i , i fa [illegible] [illegible] a e de, e [illegible] e-a [illegible] e, [illegible] [illegible] [illegible] i- [illegible] a ce de [illegible] [illegible] [illegible] ba i i [illegible] ffi a [illegible] e.

L [illegible] de [illegible] ii a i de [illegible] [illegible] e, i e [illegible] ce- [illegible] ai e d b [illegible] [illegible] e [illegible] diff [illegible] e [illegible] i [illegible] a i- a e [illegible], e [illegible] di ec i e [illegible] ai [illegible] i [illegible] e e [illegible] di [illegible] i- [illegible] i [illegible] ca e [illegible], c [illegible] e [illegible] e.

- Le [illegible] e de e age de ea [illegible] e [illegible] [illegible] a [illegible] ai i [illegible] [illegible] e [illegible] de [illegible] ai [illegible] e [illegible] de [illegible] b [illegible] e [illegible] ([illegible] e . e E [illegible] e EN 12050 e 12056)
- La ai [illegible] a i di [illegible] a [illegible] i [illegible] ba [illegible] e [illegible] i ([illegible] e . e A [illegible] ag e VDE 0100)
- S c [illegible] [illegible] i [illegible] e [illegible] ([illegible] e . e A [illegible] ag e a g [illegible] e [illegible] a i [illegible] a [illegible] c [illegible] da [illegible] e [illegible] e [illegible] i [illegible] e "Be SichV" e BGR 500)
- S c [illegible] da [illegible] e [illegible] [illegible] de [illegible] ech i [illegible] e dea [illegible] e [illegible] ([illegible] e . e A [illegible] ag e GUV-V C5, GUV-R 104, GUV-R 126)
- I [illegible] a i [illegible] ec [illegible] i e [illegible] [illegible] a [illegible] ie ([illegible] e . e A [illegible] ag e GUV-V A3)
- [illegible] [illegible] ec i a id fa [illegible] a e EN 60079-0, EN 60079-1, EN 60079-14, EN 60079-17 e EN 1127-1

Contenu de la livraison

- C ec [illegible] a ec [illegible] e([illegible] e [illegible] ide de [illegible] e- [illegible] age [illegible] a e e
- R d [illegible] e [illegible] DN 150 / DN 100 [illegible] c [illegible] i 500 e 1000
- Ma ch c [illegible] i [illegible] a [illegible] [illegible] a [illegible] ai (c [illegible] - i 1200 j [illegible] i [illegible] a [illegible] i [illegible] e a ec c [illegible] e [illegible])
- [illegible] ide de [illegible] acc [illegible] de [illegible] [illegible] a c d [illegible] e de [illegible] ef [illegible] e
- J [illegible] i [illegible] a [illegible] i e a ec c [illegible] e [illegible] [illegible] a c d [illegible] e de [illegible] ef [illegible] e
- J i [illegible] ([illegible]) [illegible] b [illegible] ([illegible]) [illegible] [illegible] a [illegible] e [illegible] a- [illegible] e e [illegible] dia [illegible] ag e [illegible] e e [illegible] - [illegible] e [illegible] ai e DN50
- Ma [illegible] ie de fi a i [illegible] [illegible] ec ec [illegible] e
- C a [illegible] a [illegible] i e [illegible] [illegible] [illegible] a c d [illegible] e de [illegible] e- f [illegible] e [illegible] (c [illegible] i 300, 500, 1000 e 1200)
- U [illegible] de c [illegible] a de (a [illegible] c [illegible] i 300)

Mode de fonctionnement : Service discontinu S3, cf. caractéristiques techniques

INSTALLATION

Le [illegible] de e e age d i [illegible] e [illegible] [illegible] a ec [illegible] e [illegible] [illegible] ec i c [illegible] e e [illegible] [illegible] e [illegible] i- ca e [illegible] ai [illegible] i [illegible] e [illegible] e ib e. I e [illegible] ce [illegible] [illegible] ai e de [illegible] [illegible] i [illegible] e [illegible] ace de [illegible] a ai de 60 c [illegible] i . e [illegible] ge [illegible] e ha [illegible] e [illegible] a [illegible] [illegible] e [illegible] a- de [illegible] [illegible] [illegible] de [illegible] [illegible] e [illegible] i ce [illegible] [illegible] i [illegible] e [illegible] [illegible] e [illegible] e [illegible].

A [illegible] a i : ec d i d a [illegible] a i d i [illegible] e di i- g a- de [illegible] [illegible] d i ea [illegible] d [illegible] i.

A e e : i fa [illegible] ac e da [illegible] [illegible] e e [illegible] a e [illegible] ea [illegible] [illegible] e [illegible] a [illegible] e c ec [illegible] e [illegible].

C d i e de [illegible] ef [illegible] e [illegible] : i fa [illegible] ac e [illegible] e a [illegible] e a e [illegible] ea [illegible] [illegible] e [illegible] da [illegible] a c d i e de [illegible] ef [illegible] e [illegible] de [illegible] [illegible] e ec a [illegible] a i e [illegible]. Si ec a [illegible] a i e [illegible] [illegible] e [illegible] a [illegible] f [illegible] i da [illegible] a [illegible] ai [illegible] d [illegible] e, i e [illegible] - ce [illegible] [illegible] ai e de [illegible] [illegible] [illegible] ici [illegible] ca [illegible] de [illegible] e [illegible] e [illegible] [illegible] ifi EN.

La c d i e de [illegible] ef [illegible] e [illegible] d i [illegible] e di ig e a ec [illegible] e b [illegible] c ea [illegible] de [illegible] [illegible] d i ea [illegible] de e- [illegible] e [illegible] fi ca [illegible] e [illegible].

I fa [illegible] [illegible] i [illegible] [illegible] i [illegible] dde [illegible] e [illegible] a- [illegible] ai i [illegible] [illegible] a e [illegible] d [illegible] ca di [illegible] a i .

ATTENTION ! T [illegible] e [illegible] i [illegible], [illegible] i [illegible] e [illegible] fi e [illegible] diff [illegible] e [illegible] i ce [illegible] [illegible] e c ec [illegible], d i e [illegible] i [illegible] e [illegible] [illegible] e [illegible] ac [illegible] c [illegible] e de [illegible] [illegible] age [illegible] a . de 6 N .

Montage du collecteur

Fi [illegible] e a a e da [illegible] [illegible] a e e (acce- [illegible] [illegible] e [illegible]) afi d [illegible] [illegible] ch [illegible] e i [illegible] [illegible] i dea [illegible] e da [illegible] e [illegible] age.

compli 300. P [illegible] de e [illegible] ba [illegible] e a [illegible] i ea [illegible] d [illegible] [illegible] e [illegible] age . [illegible] a e e [illegible] [illegible] ai e DN 100 [illegible] e

Amenée supplémentaire DN 50 horizontale

O i ai e fabi e a e
e ai e aide d e cie c he
ba e .

I e ej i a b 58/50.

P e e a da e ea ec , e
ie de 50 a e ej i a b
da e ec ec e .

ATTENTION ! I e ce ai e de i
di if de e e a e c d e de
acc da e a ea de a e e a -
ae e ba e d e c i300 e
, e ib e de ce de ie . Ce di if
d ja i e ha e i ae de 180
e e e de aca ai e e ea de
age. De he da ac d e
de ef a e e e a e de -
b e d ac a i ai e ef . Afi
d ie ce ef , ac d da e e e
a e ea a i . Le c d
da a i e e b a ch a ai
d c ec e .

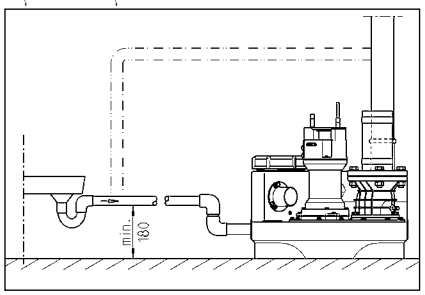

INSTALLATION ÉLECTRIQUE

T e e a a de a e ec-
e ie e a e, a fiche
i de c a da de ie e e
c fi e ec ici e c fi .

A a cha e ie e i e ie
a fiche e ec e d e e a -
e e e e a e e
a e e ie da e a e .

ATTENTION ! Ne ja ai e a fiche e ec-
e da e a ! Lea e ie e ce ib e de
i fi e e ca e de d fai a ce e de
e d a age e .

I e ce ai e de e i c e, cha e
fi , de e e ig e (e . EN), de
di ec ie e ci fi e a a e (e .
VDE) ai i e de di ec ie de . a e ca
d e ea da ai e a i .

Ob e e a e i de ice (cf. a e
ig a i e) !

Le e e di e d c a e de
ie a i e ce che e ea e e
f c i d ie a dea . Le bi d di i-
if da e i e if de a ce
d ed fai a ce de f c i e e a e
i ce e-ci e e a ag e.

Si a e e de e cha de, e e e
i e e e e e e e e e e -
e e . A a d i e e b e, i fa-
d b a che a fiche ec e ca a e a
e e a e ai e e a e ef idi. U ig a de
a e di ec a a ie .

Postes en courant monophasé

Le e di i a e ec e
e i e i a e de fa g a e ai e
i e e da e i ce a ec a -de e
d ie a de e e e ie e g e e
f ib ac i e e d e de 16 A.

Postes en courant triphasé

P e e b a che e ec i e d e
de e e age, i fa e i e CEE 5
e i a e de fa g a e ai e i e
e e da e i ce a ec a -de e d
ie a de e e e (3/N/PE z230/400 V).

ATTENTION! I fa i ie e i a e de
f ib e ac i e e de de di j c-
e de e Ce a e f ib e de i-
a ce.

Montage de l'unité de commande (pas compli 300)

Fai e f c i e i de c a de i-
a e da de e d e ec a -de e
d ie a de e e e ge de eb e -
j f . L i de c a de di i e
facia e acce ib e afi i i ib e
de effec e c e e . U e
h idi de ai e e ai i e ab e
e e e d a age i de c a de.

Niveaux de commutation

Le i de ce cha e e de
g e ie ha e da e e
a dde cha e e .

Si a e ch i i e ha e da e e
diff e , de d fi i ea e
i de ce cha e (a c i300) ca
i e ai a e e e ef -
ie eda a e e.

Le a e i de ce cha e
a e e (+2) e a che ge de i e
da e e d be (+4) a
aj e c e ce e i de c -
a de de fa a a i e.

Régler à nouveau le niveau d'enclenchement (pas compli 300)

bi e i a ai a ai e,
e e i e Ma e -0-A a-
i e "0". L aj age d i de i e
e che e effec da e d e
E a a e a gi e K1 , e e i ,
da e c ff e de a c a de. E e
a ai e ec ce e a e e d
d e.

S a e a gi e e i di de a e d ig a i P1 - P2 - P3.

- P1 = F c i diag ic
- P2 a e = e ie a dea e -
ie a ie di ai e c e
i fie a ie de ce cha e

- P3 a e = e ie a dea a ei e
ie a de ce cha e

R i e e c e d'ea
j a b di fie de e . Se e P2
d l e a e ; i P3 e ga e a -
e, i fa c de a aj age.

T e a e i e de g age, i e e
a de P1, d de da e
e h ai e. P ge ai e a e f e
da e e i e d'i e ai-
e - a e e i e. Si P3 e a
a e, e a i de g age d'
ea da e e h ai e e ge
f e e e ef i .

Refai e ce e ai j e ce e P3 e
i a e, e e e ie a i de
g age a ec ca i da e e h ai e
i e j ce e P3 a e de
ea. Le i de i e e che e ac .

Dispositif d'alarme

Le ig a de a e ie a i bie
de fa e e e . Le di i-
if da e e a dd e da d ea
ig a e e a e de e de a e
(di de ge, a AD 00 e c i
300). E e a e , ea e e e
i e e e . I e ib e de e ce
ig a e de fa g ae a e-
e e i a e b e.

Si e ie de age e e a a -
e ced c e e de a a e, i e
ib e de a e e e ig a da e
ia ec ac ec (b e 40 e 41) a
a i e (c i300 da a fiche). Le c ac
fe e e d f c i e g a
a e e cha ge a . de 5A / 250 V AC.
Le c ac ea / i i a i de a
a e.

Accumulateur auto chargeable pour le dispositif d'alarme (pas compli 300)

Le di i if da e e a de d e -
da d ea c.-d. da e ca d e
a e de c à , a e de ie a
ha e e a e d ce che . Afi e e
di i if da e c i e ga e de
f c i e ca d e a e de c a ,
i e ce ai ed i i e acc e a -
cha geab e. O i a e a e-
e e. C e e acc e a ci de
acc da e e fie a a i e a ace
e ec a ache de c be e e .
Ce i-ci e a i e e di i if da e e
e e ici e ea e d e de
de .1 he e.

A / e e de a e i d ea ac-
c e e che ge a a i e .
U acc e a ge d cha g e f c-
i e a / e . 24 he e , e che ge
c i e e a ei e a / 100 he e e .

V ifie g i e e b f c i e-
e de acc e ! P ce a, d a -
che a e i e e e d ce che
ig a de ie a e ha de ea . Le
e de a e e e d i a di i-
e de fa i a e e da e e
f e . La d e de ie e de .5 a .

N le a da ed i e ace acc- a e e cha ge ce i-ci le e e if ab de 5 a .

U i i e e de acc a- e 9V ! l' ei e i ed de - i a ec ii a i de ie f che !

Compteur horaire

I e ib ed i g le defa i e e c e h ai eda a i de c - a de (a c i 300). P ce a d ie e acc da e d c e h ai e . 8 e e fiche da e 4 c ec- e fa e e a ace BSZ a a ai e. Si ie e affiche a e e ie e e ice d e, ec e h ai ed i e e de 180 .

Arrêter le vibreur sonore interne

Pa c i 300. Re i e ca aie ce (BRX/BRX1). P e a fiche e e le de a , e fiche e ea e ca aie e e che de abe e e 2 e .

Vibreur sonore externe (accessoire)

O i a e e a e e de i de c a de.

U e a f e e e de ig a 12 VDC e ai e i e e acc d a b e "S+" e "S-" a ec ei e - ib ab b e a . de 30 A. Le ib e e da ei e e ea ch i ac i d ac i .

P c i 300, i e ib ede e ea e e id e da ed ea e a e acce i e, ce de age e - e e c ec e .

Pour les postes doubles : Voyant lumineux ou voyant d'alarme externe 230 V~ (accessoire)

C ec e e a 230 Vz (a . 1 A) a b e N e 41.

R ai e fi de c ei i de ab e Uz e 40. Le ic ec i e e g e F1.

R g e ca aie BRX2 de a fa i a e : V a i e : a BRX2 (a e (===)
V a da ea e BRX2 (ci g a e (_ _ _).

FONCTIONNEMENT

Marche d'essai et contrôle du fonctionnement

1. O i e c ce de e age e c ec .
2. O i a a e da ac d ie da e- e e ac d ie de ef e .
3. Me e e e e e i , b e e i dica i d e de a i d cha .
4. Re i e c ec j a i ea de ce cha e .
5. La e ac ie ai e a e ide e c ec . Ob e e e age e i- fice de e age.
6. S e e e ai i e a e- a e e f e de c a i de i ea a- de d i de ce che- e j e ce e edi if da e e ed ce che.
7. Fe e e ea ifice de e age a ec ec ce e e j d a ch .
8. A aide de ie c ce de a- e , ifie a ch d c ec- , de a a e de a a ie.

Fonctionnement automatique

Le f c i a e a a ai e e de def c i a e a d e. P ce a, i fa ac i a e ba c e da a i "a a a e". e ce a c a e de i ea i , a e e ac i e d ac i e e f c i d i ea da ec e . Le f c i - a e de a e (c i 300 : a de di ibi) e affich ia e di de i e e e.

ATTENTION ! E ca d d bi ce i - e e i a (e . a ai i a e d e i ci e), i fa d e a ea a e ib afi i e e e de age c i e a ai e e de a (a def c i a e c i ce e a de a e ai a e a e e cha ffe).

Fonctionnement manuel

P ac e ec a e da a i i a- e e". La e a ai ai e a e f c i a e c i id e da e d i ea de ea e . C i , i e ce ai e de ei e e age ia ifice de e age.

Arrêter

Me e e i e e ba c e da a i "0", a e ai e a e . Le di if da e ec i e def c i e.

Ne a i e a i "0" e a a de e ai e a ce i de c - a de a e ai e e ai e a fiche ec e de a i e de c a .

Inspection

Afi de ai e i a c i def c i e e , i e ce ai ede' i c e e i e d e ai i e def j c i de e a e i e d.

MAINTENANCE

N ec a d de ai e a ai e- a ec f e EN 12056-4.

Afi da e e e c i def c i - a e de ab e de e e, e

La ai e a ce d e age e a e f ca e e e a e de e e- ai e de 3 i da e habi a i i d ie e , de 6 i da e habi a i c ec ie de 12 i da e habi a- i i d id è e .

A cha e i e ei e e i a fiche ec e d e e a e- e e e i e e a e i e da e e .

V ifie i a fiche e ec be e e ca ch c e e a- c e d a agg e ca i e e chi e. Le c be e d - ag e i d ie e e a ac .

L de a ai e a ce, ec a - d de c de a a a i :

1. V ifie a ch i de e de c ei e b e a e a e de e e de a .
2. Ac i e a a e, c é e b d a- ce e aj e e ai e i be i e .
3. O i e e e ec a e de e e ; c é ea e be e d e de a e .
4. Ne age de a e e de a e de ac d ie ec e c ec e ; C é e de a e e a be e d e de a e .

Le e de e e e e de b d a cha .

5. C é e de h ie, c e i ce- ai e cha g h ie (i e cha e h ie e e e).
6. Ne age i ie d c ec e (i be- i e e a / de ige ce ic- e) e . e e ai e.
7. C é e a d e i c ec e .
8. Ri e e e a ec de ea e e 2 a .
9. C é e a ie ec i e de i - a a i . L i de c a de e e ce e ai e a ce ai - i acc a e a i , i e ce ai e de c é e g e a ca aci def c i e e. S e ga e e ef e d c ec e a ec e i h e i j e ce e a e i di a e ie ha de ea e e . E e, ef e d i e e i be i e .

A / a i effec e a de ai e- a ce, i a i e e e ice a / e e che de ai. l e ce ai e de ai e a c e a ai - e a ce e i di a e e effec- e ai i e e d e i e .

Contrôle de l'huile

(Va i a e e e 08/2, 25/2 e 35/2) D i e e da b d e i

a e e i l i a e e d a e a e d c e a e a e l a b e . L i c a e d i a g e d a c h i e a e i d e f e e "h i e" i a e a c h i e i e . A i d e c e a e a g e i c a i e d a c h i , h i e d e a c h i e h i e , c h i a i e d a g e i d e c e i e d a g e d e e h i e .

- S i h i e e c h a g e d e a (a e c a i e), i e c e a i e d e a c h a g e . C e a e l e a a l e 300 h e e d e f c i a e a i a a l a b e d e ! !
- S i c e e d a h i e e c h a g e d e a e d i e e , i e c e a i e d e c h a g e g a e a g e i e , c a i e d a c h i e a d e h i e , c e a i e d e d e e a e i d e c e d a c h i "DKG" a c e d e a i d e f e e "DKG".

Changement de l'huile

(e a a e e e a e c e d e 08/2, 25/2 e 35/2) P e a i e d e a c c i d e f c i a e , i e c e a i e d e a i e a e i e c h a g e d h i e a l e 300 h e e d e f c i a e e e a e c h a g e e d h i e a b e 1000 h e e d e f c i a e l c h a e f i . E c a d e e f a i b l e d h e e d e f c i a e , i e c e a i e d e f f e c e a e c h a g e e d h i e a i e f i . e

S i a e f e r e d e a e e a e c d e e e s a b a i e , e c e a i e d e h i e c h a g e e d h i e l d e a h i e a i e e h i e a i e h y d r a u l i q u e HLP a e c e i c i t de 22 46 c S a i e e M b i DTE 22, DTE 24, DTE 25.

L a t a u d e a i c a g e e de 380 a 415 V e M i C UC 08/2 M e 25/2 M e de 1000 a 415 V e M i F e e 25/2 BW e 35/2 BW.

L a c h a g e d h i e d i i t a e e e a e c a t a u d i d i t e . S i e e e s h a i e , c e a i t e d e d h i e a e .

Contrôle du jeu de coupe

(U i t a e e a e e e c a s i c e). C e a i d i d e i d b i e d e a e a i c i t e e i d e a c c d e d e f i a i d e i c a a i e e e c e i b e i e .

E c a d e d i i d d b d e f e e , d a e a i d e e b i c d e f c i a e d e d c i d e a i c e d e c e b e d a c e a b c a g e d e a e), i f a f a i e i f i e e e b e a b e e e c a e e e e e f e c i e e e f a i e a c e i b e i .

U i a h i e t i c a i b e e e e . e d e e j e d c e e e e d c e e d i t e d e c e . S i e j e d c e d a e 0,2 , i f a e d u i e .

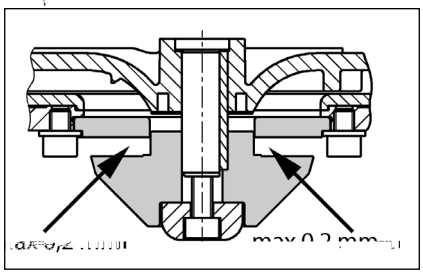

Réglage du jeu de coupe

(i a e a e e e c a s i c e)

1. B e e , d e c e ' a i d e d ' e c a e b i e d i e a i e a c e c e .
2. E e a a e d a , e d e c e a i , i e d e d a j a g e , i e a a e a a e d a i e e d e c e .
3. B e e e e f i e e e e a i e a c e (c e 8 N).
4. C e a l b i d e d e c e e f i e e e e a i e a c e (a . 0,2).

S i e j e d c e e e s i s a d , i f a e e e d e d a j a g e . P i e e e s a e 1 4.

PETITE AIDE AU DÉPANNAGE

Le pompe ne tourne pas

- C e a e i e c e , e f i b e e d i j c e d i f e e . R a c e e f i b e d f e c e e d e f i b e d e a e a e i a e . E c a d e e c h a e , a e e c i e e e i c e a e .
- L f i b e i e e e 2 A a e c a c i e d e a e a f i e a e d c a d e 230/12 V, e c a c e d e a e a i e a i d e c h a a h a 230 V d f e c e . U f i b e d f e c e e d i e d e a c t e e a e a e a e .
- C b e d a i e a i e d a g = a c a e a i t a e e a e f a b i c a
- L e a e d e e , h i e c e c e d e e a e a e a d i e a b c a g e .

Le poste ne fonctionne pas, signal d'alarme

- L e h a e a e e a d e a d e a c i a a e c e c e e d e e b t e = f e e a a e d e e e , i d e c e c e e e a f i c h e c e , d e a g e i e d e a e e a d i e a b c a g e .

Rendement de refoulement diminué

- L a e d a c d i e d e f e e a i a f a i e .
- C d i e d e f e e b e = i c e a c d i e d e f e e
- C a e a i e e b e = f e e a e (i d e a c d i e d e f e e i 300) e e e e c a e a i e e
- A a i d e a e b e = e e e a d a i e c e e e c b é e e ° a g e .

L'affichage indique "Drehfeld falsch" (rotation du champ incorrecte, uniquement courant triphasé)

- P e i c e c d e h a e h a e a t a a e, c e e i e f e e e e d e a e e e f a i b l e i e i c a = C h e c i d a c h a e t e a i t a e e e i c e .

L'affichage indique "Störung Pumpe" (Défaillance Pompe, pas compli 300)

- P e g e a e, i e d e e c i c e e e i e i c d e c h a g e e t d e e e c e i e d e . Afi d e e a e e a e e e c h a e d e i e , c e i - c i d i e e i i a i d e f a a e e . L i d e c h a d e d i e e e c e i c e t a i f i a c i e e b d e i i a i a i .

L'affichage montre "Hochwasser" (Niveau trop haut des eaux usées, pas compli 300)

- L e i e a d e a d a e c e c e e e h a e h a i d e f e e i f f i a d e e i e a b d a e = E e e e e b c i d a e a e e a c d i e d e f e e i e a b d a e .

La diode P1 sur le module de contrôle analogue s'allume en continu (pas compli 300)

- I a e d f a i a c e d d e c e d e i e a = a e e e i c e a e
- L a a d e a i d e e d a e c e c e e = a j e e d e a
- R e t : c e c a i a g e e e a g e i d i e a b e d e f c i a e .

La pompe fait du bruit et ne s'arrête pas (pas compli 300)

- L e i d e d e e b a =

E e e e i i d e f i a i t a a e e i c e c e . E e a d e d e a d i e, e e a c e e i d e . R e e e i d e f i a i . L a d i d e LED2 e i e e a d e e a e i d e d a g e .

ATTENTION ! L e i e a d e c e c h a e d i a i e a e e e a e e e d e a a j (cf. "R g l e a e i e a d e c e c h a e ").

VEILIGHEIDSTIPS

ATTENTIE!

Personeelskwalificatie

Veilig werken

Veiligheidsinstructies voor de gebruiker/eigenaar

Veiligheidsinstructies voor montage, inspectie en onderhoudswerkzaamheden

Eigenmachtige modificaties en vervaardiging van onderdelen

Oneigenlijk gebruik

Aanwijzingen voor het voorkomen van ongevallen

GEBRUIK FECALIËN-POMPINSTALLATIES

De ka -e -k e c i-feca . i- a ie ij c f de LGA- eke i g ge e ge chik he e a af- a ie ie e i , ee a a h i h de ijk afa ie e de geb ike- ijke e egi ge .

De ak k e d ie a e aa ee a . h g e a 2 WS e ee a i ae e i de a 7 dage .

De ege ae a ag ie d ie a e aa, a ae i be a d ege a ie c f IP 44.

I die ge a ee d a ge ch e e bij j i geb ik, d e d ege ae aa de be che i g ei e a de EMC ich- ij 2014/30/EU e i ge chik geb ik i h i e aa i g he e be e ek ici ei e . Bij aa i g ee i- d ie iee e e k i ee i d ie iee beh ijf e ee e ie g ia ee eige h g a ig a f , a , e d be aa de a dighede e ee ech e be e digheded ege ig e eke ig - de geh de .

Bij geb ik a de i a ie e e de e ec ie e ai ae e e , ch if e de g ee ijke be ai ge de a- ge eefd, a bij bee d

- P i a ie e af a ie a ge- b e e ei (bij bee di E- a EN 12050 e 12056)
- I a ie a aag a ig i a ie e (bij bee di D i a d VDE 0100)
- Vei igheid e beidi idde e (bij - bee di D i a d Be Sich V e BGR 500)
- Vei igheid i he af a ie i a ie e (bij . i D i a d GUV-V C5, GUV-R 104, GUV-R 126)
- E ek i che i a ie e d ci id- de e (bij bee di D i a d GUV-V A3)
- E ie bei igi g c f EN 60079-0, EN 60079-1, EN 60079-14, EN 60079-17 e EN 1127-1

Leveringspakket

- Ta k e (e) e k fe de i aa
- Ve k DN 150 / DN 100 c i 500 e 1000
- O e ch if f e ia ie (c i 1200 e a i che e bi di ge e be e- igi g i ge)
- Aa i fe de keidig
- ea i che e bi di g, e be e igi g- ige de keidig
- S eekafdichi g(e) de ha d a- e aa fe e ai aa DN 50
- Be e igi g a ie iaa de a k
- Te g agke e de keidig (c i 300, 500, 1000 e 1200)
- Rege ae (ie bij de c i 300)

Gebruikswijze: intermitterend bedrijf S3, zie technische gegevens

INBOUW

De i a ie e ijaad de ge a ee d e da igda aa e ee d. Naa e b ea e e - de h de de ee e ee e k i e a e i e 60 i de eed e f h ge aa e ig ij .

Ve ia ie: de e ia ie eidig e e he dak de ge eid.

I aa : I de i aa de a k e ee af- a ae ch ifaf ie ij aa geb ach .

P keidig: Ach e de e g agke i de keidig e ge ee afa ae ch if- af ie ij aa geb ach . W d de e g- agke ie eege ee d e de i a ie, da e ee EN-gec ificee de e g- e be eigig de i geb d.

De keidig e ee b e he ka e i g i ea de ge eid.

V de a ae ig a a de o i e e ee k ke de aa geb ach .

ATTENTIE! A ch e e die die e he a e e a af de ijke de de e aa de a k ge ch ch e ee a . aa ek e 6 N de a ge- keaaid.

Montage van de tank

De ch ifaf ie i de i aa (ebeh e) ie i bi e ige a ae ijde ch de i a ie e k e .

compli 300. De ge e ei aa DN 100 aa de ijka f b e e ga e aag 102 f ee dec e ee aag bij de e ke i g e age e e . De eege ee de k fe e e eka ch e e je i de i aa be e ige .

He h ekij e de e ke i g a de i - a ie de a ch e e e e ge ch de i a ie e de ch a fe de aa - ag de i aa b i ch ie .

Da de e ke i ge de g da ke ch af eke e , i b e e de gge aa ch e .

N ka de ch a fe ch de a ge keaaide de i a ie e h ch e e e e i ge i de e ea ke d.

Alle andere c i- i a ie e de k fe de aa ag de i aa b i- ch ie e e ij e .

A ch e ee DN 150- iji aa de geb ik, e de e ee e beh a ee ga e - aag ee dia e e a 152 de e ke- i g de e ge eaagd e e ad. De a da d e e e da e de ch ie (acce ie) de ge e e he i cha- ke ie a ie ie de gedefi i- ee d.

Opmerking: Bij de c i 500 e 1000 ka de i aa a DN 150 ae DN 100 de e ke id, i die he eege ee de e - k ee i de k e fe ch i ge aa .

De e ka ch e e a de k fe e- ig aa keaaie .

Ga e de e age a de a k af- eke e e ib e .

H ch ef ch e e i g e g d he ga i de a k eke e a ch e e .

ATTENTIE! De ch e e ech e aa - keaaie da de a k ie d e d, - da e a de ka ekkage aa .

V de i a ie a de e ie c i 1200 i de a k b e die ige ch e ee h ekij e ch ijke e .

Montage van de ventilatie

De ch i g ij e de e ch if f DN 70 ech b e de a k aa ch ie e e he dak eide .

Bij de c i 1200 de b e e ech e ij 78 de e ke i g af age e e a- e . N de e ia ie ij e de e a i che e bi di g DN 70 aa ch e e e he dak eide .

Montage van de drukleiding

O de af e fe e :
1. Te g agke (i die ie i beg e e)
2. Af i ch if (ebeh e)
3. Aa ch ife ch e
4. e ee ea i che e bi di g de keidig aa ch e e e ee ch e he ka e i ea eide .

Aansluiting DN 50 verticaal op de noodafvoer

De aa ch ig d ge ik he aa ch e a ee ha d a e aa .

De i i de e ke i g e age e ee ga e aag e a .

De g 58/50 aa e ge .

Ee i aa b i e ia e a 50 d de gafdichi gi de a k eke .

aa ˆ ˛ eidi g k˛ e afb je˛ b˛ e e
je˛ g ˆ˛ i g ˛ ede . Q de e je˛ g ˆ˛ -
i g e˛ je˛ ijde ˛ e de i aa˛ eidi g
he˛ h g ˆe ˛ ˛ de ˛ ˛ ch . De ˛ -
˛ ch˛ i g ˆ eidi g ka ˛ de aa ge ˆ e
de˛ a k e˛ i a˛ ie.

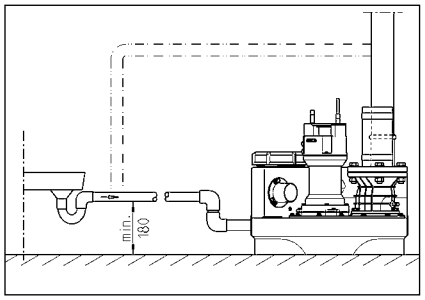

ELEKTRISCHE AANSLUITING

A ee ee gek a ificeje de e ek-
˛ e˛ k˛ e˛ ag je k aa˛ hede
aa de ˛ ˆ , ˆekke ˆ ˛ ege aa
˛ je e .

V˛ afgaa de aa a e je k aa˛ -
hede dei ˆa a˛ ie ˆk e e a
he˛ e ek˛ ici˛ ei ˆ e˛ je ˛ ˛ -
ge da˛ de i ˆa a˛ ie d˛ a de e je ˆ e
ie˛ ie˛ ˛ de ˆ a i g ka ˛ de ge-
e˛ .

ATTENTIE! Leg i˛ de ˆekke i he˛ a˛ je !
E e˛ ee bi e˛ d i ge d a˛ je ka eide
˛ ˛ ˆ˛ i ge e ˆchade.

De a˛ e a ˆˆ i g ij de ˛ e (bij . EN),
de a d-ˆ ecifieke e˛ ge i g (bij ˛ bee d
VDE) e de ˛ ˆch if˛ e a de aa˛ ˆe ijke
e˛ je k˛ i a˛ ˛ e˛ e i ach˛ ˛ de
ge˛ e .

Bes˛ ijf ˆˆ a i g i ach˛ g e (ie˛ e-
aa˛ je)!

De i ˆa a˛ ie ˆ hebbe ee i ea ˆchake i g
die de ˛ i - f˛ ˆchake˛ , afha ke ijk
a he˛ a˛ je ei . De ie˛ a de i ge-
b ˛ de a˛ ˛ geef˛ da˛ je ee f ˛ cie ˆ˛ i g
i ˆ, ˆ k a i ˆdi˛ ˆ ech ˆ˛ ijde ijk.

I ˆ de ˛ e˛ je˛ ge ˛ de , da ˛ d˛
de e˛ i ge ˆchake d d ˛ de ikke i g ˆˆ he-
˛ ˆa˛ e . V˛ da˛ de ˆ˛ i g ˆ ˛ aak ˛ d˛
gehe e ˛ e˛ de ˆekke ˛ i˛ he˛ ˆ -
c ˛ ac˛ ˛ de ge˛ kke , ˛ da˛ a de ˆ de
˛ a˛ ˛ a˛ i ch je aa ˆ aa˛ a afk e-
i g. E˛ i d˛ gee di ec e ˆ˛ i g ˆ e di g
aa˛ ˆ.

Wisselstroominstallaties

De i ˆa a˛ ie˛ ag a ee˛ a˛ je ˛ de aa -
ge ˆ e ee ˆ c ˛ ac˛ da˛ ge ˆ de
˛ ˆch if˛ e i ˆ ge ˆa je d e ich i ee
˛ d ge˛ ˛ i ˛ e˛ b e he˛ je ˛ g ˆ˛ i ea˛ be-
i d˛ e˛ e˛ 16 A ˛ aag) i ˆ be e igd.

Sterkstroominstallaties

V˛ de e ek˛ i ˆche aa ˆ ˛ i g a de ˛ -
i ˆa a˛ ie˛ e˛ ee ge ˆ de ˛ ˆch if-
˛ e ge ˆa je d 5- ig CEE-ˆ c ˛ ac˛
˛ de aa ge˛ ach˛ , da˛ ich i ee ˛ d ge
˛ ˛ ˛ e˛ b e he˛ je ˛ g ˆ˛ i ea˛ be i d˛
(3/N/PEz 230/400 V).

ATTENTIE! A ˆ ek˛ je i ge ˛ de i ˆa a-
˛ ie˛ ge a ee ˛ e age ek˛ je i ge f eke-
˛ i ga˛ ˛ a˛ e˛ e C-k˛ a ak˛ je i ˆ iek ˛ de
ge˛ je ik .

Montage van de regeling (niet bij de compli 300)

De˛ ege a˛ je˛ ag a ee i ˛ d ge˛ i ˛ e ˆ b -
e he˛ je ˛ g ˆ˛ i ea˛ ˛ de ge˛ je ik e
de beh i i g˛ e˛ ˆeed ˆ ge ˆ e b ij e .
De˛ ege a˛ je˛ e˛ ga akke ijk ˆ ega ke ijk
ij , da˛ e k˛ e˛ e ee c˛ e˛ e -
ge ijk i ˆ. H ge ˛ ch ch igheid e c de -
ˆa ie k˛ e de˛ ege a˛ je be ˆ chadige .

Schakelniveaus

De i -e i˛ ˆchake ˛ e ij i de fa˛ iek
i ge ˆ e d de ˆa da˛ e i aa˛ h g˛ e a de
be˛ effe de i ˆa a˛ ie.

A ˆ ˛ ee a de e i aa˛ h g˛ e i ,˛ e˛
he˛ i ˆchake ˛ ˛ ie˛ defi ˛ e
(ie˛ bij de c˛ i 300), a de ˆ ka di˛ i
be [aade ge a e eide ˛ ˛ ee ˛ je ˆ˛ g ˆ˛ -
i g i de i aa˛ .

De˛ ege a˛ je ˆe˛ de a de e ˆchake ˛ ˛ e
˛ he˛ a˛ je˛ (+ 2 ˛), e bij d bbe e i -
ˆa a˛ ie k ˛ de iekbe a ˆi g (+4 ˛),
da a˛ ˛ a˛ i ˆch die je ee k˛ ˆig -
ie˛ i ˆ.

Inschakelniveau opnieuw definiëren (niet bij de compli 300)

Schake de i ˆa a˛ ie ijde ijk ˛ i˛ , e˛ de
ha d-d-a˛ ˛ a˛ i ˆch-ˆchake a˛ je . 0 .
De aa a ˆˆ i g a he˛ i ˆchake ˛ ˛ i d˛
aa˛ ˆ i de˛ ˛ d e a ge ˛ i e je K1
aa de˛ ech je ijka˛ ˛ a de be ˆ˛ je i g. Ve -
ijde ijde ijk de˛ a ˆ je a˛ e dek ˆe a de
˛ d˛ e.

O de a a ge ˛ i e je be i de ich ie
edje ˆ , die˛ e˛ P1 - P2 - P3 ij aa gege e .

- P1 = Diag ˆef ˛ cie
- P2 b a d˛ = Wa˛ je ei ig b e he˛ ˛ i -
ˆchake i ea˛ ˛ a˛ je g de he˛ ˛ i -
ˆchake i ea˛ ˛
- P3 b a d˛ = Wa˛ je ei heef˛ he˛ i ˆcha-
ke i ea˛ be eik˛

V˛ de je˛ a e˛ a k˛ ˛ aa de de ka˛ ˛
a de i aa˛ ˛ e˛ a˛ je . A ee P2˛ ag je a -
de , a ˆ k P3 je a d˛ ˛ e˛ he˛ ee e a -
de˛ ˛ de bijge ˆe d.

P aai de k ei e ˆe ˆch ef de P1
˛ ˛ ee ˆ age˛ ˛ e˛ de k˛ k˛ ee. D˛ ˛ de
˛ ˛ je i de˛ a k de he˛ ˛ i ˆchake ˛ ˛
e aa˛ h˛ a˛ je˛ a˛ b e k˛ e . B a d˛
P3 da g ˆeed ˆ, ˛ d aai da de ˆe ˆch ef
g ee ˆ ag˛ e˛ de k˛ k˛ ee e d˛ de
˛ ˛ je ie˛ ˛ de .

He haa di˛ ˛ ce ˆ e˛ a g ˛ ˛ P3 ie˛
˛ e˛ je a d˛ , ˛ d aai de ˆch ef da˛ e˛ je
˛ ˛ ich ig ˛ ege de k k i ˛ ˛ P3 ˛ e˛ je
gaa˛ je a de . He˛ i ˆchake ˛ ˛ i ˆ ˛ i ge-
ˆ e d.

Alarminstallatie

S˛ ˛ i g˛ e di ge ˛ de e i ˆ ee
a ˆ ak e ˆ i ˆch e˛ je ege e . He˛ a he˛
ˆ˛ e˛ afha ke ijke ˆa da˛ da˛ je˛
e d˛ e˛ ˛ ˛ ˆ i ge a de ˛ ˛ d
edje, ie˛ bij de AD 00 e c˛ i 300). Te-
ge ijke ˛ ijd k i k˛ je ee ge ˛ e˛ je˛ e d ak e ˆ-
˛ i ˆch a˛ je˛ ˆig aa . Di˛ ak e ˆ i ˆch ˆig aa
ka d ˛ he˛ je he e a de ˆ ˛ ˛ i g f ge-
i he˛ a g˛ ee ˛ de i˛ ge ˆchake d.

I ˆ de˛ ˛ age ca ie gee ak e ˆ i ˆche
c˛ e˛ e a de ˆ ˛ ˛ i g˛ e di g˛ ge ijk,
da ka he˛ a˛ je˛ ˆig aa ia he˛ ˛ e ˛ i -
aa˛ ˛ ije c ˛ ac˛ (k˛ a˛ e 40 e 41) a˛ je de
˛ ˛ i ˛ aa˛ (bij de c˛ i 300 i de ˆ ekke)
˛ ˛ de ˛ ge eid. He˛ je kc ˛ ac˛ a de
je a e ˆ ˛ i g i ˆ˛ a˛ e˛ 5A / 250V AC
be a ˆ˛ ba˛ je . He˛ c ˛ ac˛ e˛ ich a hef-
fi g a de ˆ ˛ ˛ i g.

Accu voor alarminstallatie (niet bij de compli 300)

De ˆa da˛ da˛ je˛ i ˆa a˛ ie i ˆ afha ke ijk
a he˛ e ek˛ ici˛ ei ˆ e˛ - da˛ i egge i
he˛ ge a a ee ˆ˛ ˆ ˛ i g ka gee
h g a˛ je a˛ je˛ ˛ ˛ de gege e . Q de
a˛ je˛ i ˆa a˛ ie k˛ ijde ˆ ee ˆ˛ ˆ ˆ -
˛ i g je ki g˛ e h ˛ de ˛ ˛ e˛ e acc˛ -
˛ ˛ de ge˛ je ik . He˛ d˛ ich ige dek ˆe
e e . De acc˛ ˛ de aa ˆ ˛ i k˛ a˛ aa -
ˆ ˛ i e e de˛ da˛ ˛ be ˆ˛ a de aa˛ ˆ
de˛ ˛ i˛ aa˛ ˛ e˛ de aa e ige kabe bi -
de ˆ be e ˆ ige . De e ka he˛ a˛ je˛ ˆ ˆ˛ e˛
bij c i˛ a˛ je˛ ged e de ge e˛ je 1 ˛ ˛
a ˆ˛ ˛ ie .

Nada˛ je e˛ je˛ ˆ˛ i ˆ, ˛ d˛ de acc a˛ -
˛ a˛ i ˆch ge ade . E e ege acc˛ i ˆ bi e
ge e˛ je 24 ˛ ˛ e˛ je˛ be˛ d ijf ˆk a˛ je, ee -
edige adi g ˛ d˛ a ge e˛ je 100 ˛ ˛
be eik˛ .

He˛ f˛ c i je e a de acc˛ ˛ ege a˛ ig
c˛ e˛ je e e ! Da˛ ˛ e de e˛ ˆ a i g ˛ ˆ-
ˆchake e e ee h g a˛ je˛ ˛ edi g i ˛ -
je e . He˛ ˛ e a he˛ ge ˛ id a˛ je˛ ˛ ˛ ag
ged e de ee aa ˛ a˛ ˛ i ˆ e ie˛ ˛ je k-
ba˛ je af e e . De e e ˆ d˛ ˛ be˛ d aag˛ -
ge e˛ je 5 ja˛ je . De i ge˛ je ik a˛ eda˛ ˛ de
acc˛ ˛ je e e de e à 5 ja˛ je ˛ ˛ ˛ g
je a ge .

A ee ee 9V-acc˛ ge˛ je ike ! Bij
ge˛ je ik a˛ je ge acc˛ ˆ be ˆaa˛
˛ ffi g ˆge a˛ je .

Bedrijfsurenteller

O ˛ i ee ka ee be˛ d ijf ˆ˛ e ˛ e˛ je i de
˛ ege a˛ je˛ ˛ de ge aa˛ ˆ (ie˛ bij de c˛ i
300). Hi je˛ ˛ e de aa ˆ˛ i ge a de be˛ d ijf-
ˆ˛ e ˛ e˛ je ge e˛ je 8˛ i k˛ ˛ e
de˛ i˛ aa˛ aa˛ ˆ BSZ i de 4 b ˆˆ e
˛ eke . I die a he˛ e˛ je i ˆchake e ˆ a
de i ˆa a˛ ie ie˛ ˆ ˛ d˛ e˛ je gege e˛ ˛ e˛
de˛ ˛ e ˛ e˛ je 180¸ ˛ de ge˛ aaid.

Intern alarmzoemer uitschakelen.

Ge d ie i 300. De e ege- de j e (BRX/BRX1) egha e . O da de ekke ie k ij aak , de j e ie ee i a de 2- ige c ec aa- e .

Externe alarmzoemer (toebehoren)

He d ich ige dek e a de ege ae- e .

O de k e "S+" e "S-" ka ee e a, a e ake ie che 12 VDC/ -chake ae e ee e e ik a a . 30 A de aa ge e . De i e ea e- e ka ae ke e de i ge chake d f ige chake d.

Bij de c i 300 ka ee a he e ek ici- ei e k afha ke ijk ae a e- eb he e de g ed, ee age- e je ia e ig de ak.

In dubbele systemen: Extern 230V knipperlichtje of waarschuwingslampje (toebehoren)

230Vz je(a .1A) k e Ne 41 aa ije .

Ge e de d aadb g a k Uz ae 40 aa e ge . De i k i g d d F1 be ei igd.

De i eekke g BRX2 a g i e e :
K i e ich je: de BRX2 (a- e ===)
Wae ch i g ja e BRX2 (k i e e'd _ _ _).

GEBRUIK

Proefdraaien en functiecontrole

1. He ei igi g ik de ak e e .
2. Sch if i de i aa- e d keidig e- e .
3. I a ie de a i g e e , d aai- e d ege a i de ga e h de .
4. Ta k he i chake ia e .
5. De chake ich e f i e de ak d ge eegd. He e ce ia de ei igi g e i g ge .
6. De e a de ia chakeig e de ha d ag ae b e he i chake i e da he ae afgaa .
7. Rei igi g e i g e e ik e af- dich i gaf ije .
8. Aa de ha d a e chi e de chake c- c i de afdich i ge a de ak, de i - ige de eidige c e e .

Automatische stand

De a a i che a di de a e a d a de i a ie. Hie e e de i e- chake ae i de a d "A a ik" (a- a i ch) de ge e. Via de ge e e ae de ia e chake ig d de aa de ha d a he ei f ia i de ak i- e ige chake d. De ki g a de (bij de c i 300 beid ijf ge eedheid) d aa gege e d ee e edje.

ATTENTIE! Bij i dk e h e ee he- de aa e (bij . egi g a ee a bad) e de ch if i de i aa e de e ge ea e , da de i a ie i de a e chake a d bijf e ke (gee c i e aaie , a de be aa e ka e hi i g a de).

Handbediening

De i e chake ae i de a d "Ha d" e e . De e k c i ee afha- ke ijk a he af a e ia de ei igi g e i g i de ga e de geh de .

Stopzetten

De i e chake ae i de a d "0" e e , de i ige e. De ae i a ie ige e ge ikkae .

V e e ie e de h d- e k a hede aa de ege ae f de ie a d "0" ge i- ke , ae de ekke i he c ac e ekke .

Inspectie

O de beid ijf eke heid ge a de e e aa de ijk ee i ec ie a de i- a ie aa i de , e i beg i a de ij e bi dige .

ONDERHOUD

Wij ade aa he de h d i e e c f EN 12056-4.

O ee e a e e ai ee be - bae heid a i a ie e gea de e , ade ij aa ee de h d c ac e ije .

He de h d a de feca t- i a ie e de aa ege e i a dh di g e e de ige e d d ge ecia i ede ak e- e e e a 3 aa de i be- id ije , 6 aa de i a e e geb - e f 12 aa de i ee ge i i ge).

V afgaa de aa a e e k a - hede dei a ie k ee a he ee ek ici ei e e e e e- ge da de i a ie ie d a- de e e ie de a ig ka de ge e.

Sekke e bbe a g e- cha i che e ch i che be cha- digi g c e e . Be chadigde f gek ike a ge f eidige e e de e ge .

Wij ade aa bij de h d de ge de e k a hede ije e :

1. De e bi dige ekkage c e e d de e ge i g a de i a ie e de a e - g ed e de eke .
2. Bedie e a de ch if; c e e f de e e be eeg , i die dig aa- a e e i e e .
3. O e e ei ige a de e g - b kke i g, c e e a aa i g e k- ge (k e).
4. Rei ige a de e di ec aa ge- e eidige ; c e e a de aaie e de age .

   Ve e e aaie k e che e a de hebbe .

5. O iec e e, i die dig bij e f e- e (i die ee iek e' aa e ig i).
6. Bi ei igi g a de a k (i die dig f bij ecia e ei e), bij . e e ijde e .
7. C e e a de e a d a de e- a e a k.
8. O de 2 jae de i a a ie e a e d e e .
9. C e e a he e ek ich e gedee e a de i a a ie. De ege ae e f i de- h d ij ae ch e ee acc ij i geb d, da e die ege a ig - de gec e e d e ki g. Dae e bij ee e ig - ge aak e i a a- ie de e i de a i e ee h g a e ae k i k. Dae aa e de e i die dig de ge ei igd.

Na ii g a de de h d e k a- hede ka de i a a ie a' ef aaie e i geb ik de ge e. Va he de h d e ee e ag de ge- aak e e edig a a e ige e de e k a hede e de e e e gege e .

Oliecontrole

(Ge d a ee 08/2-, 25/2- e 35/2-i a- a ie) E a de e ka ch e e f i b e ch e e d de e ge aaid e de de a k gehaa d. De - e af a e i g a de iek e d de af i ch ef " " (ie) ae b i e e afgedich . Te c e a de iekke i gafdich i g d de ie i de iek e e i beg i a de e e- e de h ee heid afge a e e e a e di ee ch e aa bekae .

. A de ie e gd i e a e e- kach ig i) e de ie de e e . Na g ee 300 beid ijf e e a . ech- e a 6 aa de , ie c e e e ! . I de ie e gd e e a e a e ei igi ge , da e aa de ie k de gi i gafdich i g de e- a ge . O de iek e e be ake , ka k ach e af de e ek de a afdich i g c ea e aa "DKG" i aa a de af i ch ef "DKG" de ge e d.

Olieverversing

(Ge d a ee i a a ie e de - e 08/2, 25/2 d 35/2) Te beh d a ee be b e e ki g e a 300 be- id ijf e de ie de e e aa de e e e da a a e ke 1000 beid ijf e . Bij i de beid ijf e e e i e ee aa e jae de ie de e e .

W d af a a e k ch e de addi- ie e afge d, da e de ie a- e a k e e e de .

V de i g a de ie i de ieka- e h a i che HLP- ie a i c - i ei k a e 22 46 de ge ik, bij- bee d DTE 22, DTE 24, DTE 25 a M bi .

De h e ee heid be aag 380 de M iC - e UC 08/2 M e 25/2 M e 1000 de M iF ee- e 25/2 BW e 35/2 BW.

De ieka ag a ee de ge d e de aa gege e h e ee heid ie. Te ee ie ka eide defec e aa de .

Controle van de snijspleet

(A ee a e a i g e e ee ij ie). E e de gec e d f beh i i g ch e e a de e de bi di g - e be e igi g b e a de i a a ie g ed a i e , e i die dig e e de aa ge aaid.

Bij af e d debie , e e d a aai bij ge ik f af e d ge (b kke - eigi g a de) e e de aai e he ij echa i e d ee ecia i ij age de gec e d e e e ee a ge .

Me ee ge chik h idde a bij - bee d ee e aa ka de ij ee - e de ij e de ij aa de ge- e e . Ee ij ee a e da 0,2 e de ggeb ach .

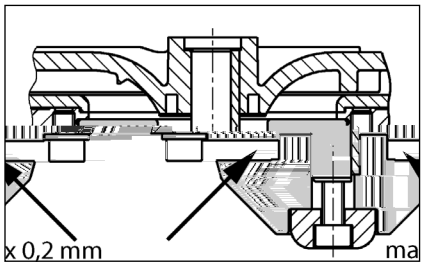

Instellen van de snijspleet

(A ee a e a i g e e ee ij ie).

1. De ij e ee k h b kk e e de ce a e i b ch ef i ch e e .

2. De e , de ij e ee a i g ijd e e ge de e e de ij e e g aa e .

3. De ij e ee b k h b kk e e e de i b ch ef e a ch e e (aa ek e 8 N).

4. C e f de ij e ij ka be e- ge e de ee ie e e (a . 0,2).

I de ij ee g eed e , ijd e da g ee a i g. De a e 1-4 e e de h haa d.

BEKNOPTE HULP BIJ STORINGEN

De installatie loopt niet

- Ne a i g, ek i g e d e ek c e e . Defec e ek i ge a ee a ge d ek i ge e de e fde i a e a de . Bij h haa - de ijk k a e a de ek i g ee e ek e f de k a e die a de fa iek be e .
- De i e age g a e ek i g a 2

USO

Le ...a i i di ... e ... e ... ac... e... ef... e c... i... e ... e ... ... ca... e ...e- c d a... i gia LGA e ... i dica... e ... i ... e ... e ... di ac... e di ...e ic da bag i e ... ia i, ch di ac... e ... che d... e...i- che c... i...e c... i.

I ...e ba... i ... ...l... ...e gibi i ... 'a... e a ... a . di 2... .c.a e ... a d... a... a... a... a... a di 7 gi... i.

I c... a d ... ...l... ...e gibie... a... e...i- ...e... e ag i...chi i di ac... a ...ec d a IP 44.

I ca... di i ...a a i e ...ec d e di... ...i- i ie di... c f... e, i c... a d ... ddi...fa ... e... i...i di ... e i e de a di e... ia EMC 2014/30/EU ed... id e ... ... e ...e... e d... e...ic de a... e...edia... e...a i e e e... i- ca ...bb ica. I ca... di c ega e... ad... a ... e... e i d... ia e a 'i... di ... a fabb ica c ... 'a... e... a i e dic... e... e... e ie - ...e da'... ... a...f... a... e dia...a...e ...i e ade- g... ...ide ec ...ide ... e ... a e...i...e aa e i... ... e ei ...fficie...e.

P... '... de e...a i i...ide ... i... e... e e ... ea... e eggi, ... a... e ai a ie e di e... ...i e ca i, ad e...

- S...a i di... e a e... ac... e... ef... e ... i... e aggi di edifici e... e ... ag ic... i (ad e... i E... a EN 12050 e 12056)
- Rea i a... i e di... ia... ie e... ici a ba...a ...e ...i e (ad e... i G... a ia VDE 0100)
- Sic... e a... e i ... a... i (ad e... i G... a ia Be... SichV e BGR 500)
- Sic... e a i ... ia... i di ...e ic de 'ac- t... a (ad e... i G... a ia GUV-V C5, GUV-R 104, GUV-R 126)
- ... ia... ie e... ici... e i ... a... i (ad e... i G... a ia GUV-V A3)
- A... idef ag a i e EN 60079-0, EN 60079-1, EN 60079-14, EN 60079-17 e EN 1127-1

Dotazione

- S... ba... i c ... a(e) e f a gia di ...e - ... aggi ... aff...
- Rid... e DN 150 / DN 100 ... c... i 500 e 1000
- Ma ic... ...e e ... a e...a i e (c... i 1200 c ega e... i e a...ici c fa...ce... e)
- F a gia di c ega e... ... i ea di... a - da... a
- C ega e... e a...ic c fa...ce... e ... a i ea di... a da... a
- G... i i ia... i a ... a... a... a - ... a a... a... a e a... aff... DN 50
- Ma... ia e di...fi...aggi ... i... ba... i
- Va a di ... i... ... a i ea di... a - da... a (c... i 300, 500, 1000 e 1200)
- C... a d (c... i 300)

Tipo di funzionamento: Funzionamento al-

di ˆi i a e . Li b i a e a ica e a i ea di c eg e ca e - b i di ˆc ic i ag . P e i i- ag , ˆfia e a i ea di aff e i a . La i ea di e ia i e e e c ega a a e ia i e de ˆ ba i .

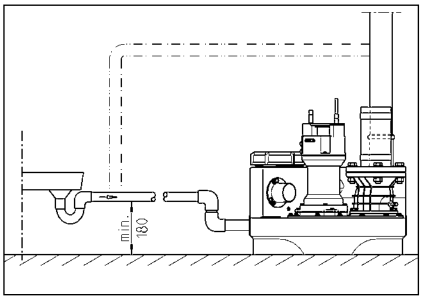

COLLEGAMENTO ELETTRICO

S e e ici a e e e eg i e i e i e ici a a a, a a ˆ i a a c a d .

P i a di a ˆia ˆi a acc e a ˆ i a de a a i e i d che a a i e ˆ a e e e e e ˆ e ˆi e da a e ˆ e.

ATTENZIONE! N e ai i ac a ˆ i a! L'e e a e e a i e de 'ac a' ca e g a ˆ e da i.

Ri e e e e a ide (ad e. EN), e di- e i e a i a i (ad e. VDE) e e a i e de e c ag ie di f i a e e ica ca i.

O e a e ˆ i e d'e ci i (ed e ghe a ide ifica i a)!

Le a i i ˆ d a e di c a i e di i e che a i a di a i a a - a a ˆec da de i e di ac a. I ˆeg a e ac ic de ia di a ˆ e i e a ˆeg a a a e ˆe a di 'a a ia di f - i e a che ˆe e a! ˆ - a ea.

Se a a ˆi ˆ i ˆca da a, i a di a g e a' ˆ eg e. P a de a i- ˆ i e de a ca ˆa de 'a a ia, ˆi de e acc e a ˆ i a 'ich i ca c i a a ebbe ia i ˆi a e d i aff edd e . N i a ˆeg a- a i e di e a de 'a a ia.

Stazioni a corrente alternata

La a i e e e c ega a ˆ ad a e ˆa i a a a ˆec d e e, a a e ˆi a i bie e a ˆci a di ˆ a de i e di i ag e e a c f ˆi- bi e da 16 A (i e).

Stazioni a corrente trifase

P i c eg e e ic de a a i e di ˆ e e ˆi de e e ed e a e ˆa CEE da a 5 i i a a ˆec d e e, a a e de e ˆi i bie e a ˆci -

a di ˆ a de i e di i ag (3/N/ PE z 230/400 V).

ATTENZIONE! C e ef ˆibi i a a- i e ˆi de i i e f ˆibi i i i di ˆ ˆi i a a ici c a i ica C.

Montaggio del comando (non compli 300)

Me e i f i e i c a d ˆ i - bie i a ˆci ˆia di ˆ a de i e di i a- g e e 'a ggi e ˆ e chi . I c a d de e e ˆ e be acce ˆibi e af- fi ch ˆia e ˆibi e c . L'e- e a a idi e a c de ˆa da - eggi e i c a d .

Livelli di commutazione

I i di a i a i e e di a i a i e ˆ ˆ a i da a fabb ica 'a e a di af- f ˆ a d d de a e a i a a i e.

Se ˆi d e ˆe e e i e 'a a a e a di aff idefi i e i di a i a i e (c i 300) ich i ca c i e 'af- f ˆi ifica e i ag .

G i a i i di c a i e 'a e (+ 2) e i c ic di 'icc (+4) g i ia i d i e g e a i a a- ic e e da c a d .

Ristabilire il livello di attivazione (non compli 300)it082 >>BDC avvieC >> modulSpan <o >BD3Dis/MCi 508pan <o /T1_1 1 Tf -0.03 Tw 8 0 0 8 219.685 526.9

Cicalino di allarme esterno (accessori)

A[illegible] e [illegible] a[illegible] e [illegible] e de c[illegible] a d .

Ai[illegible] e [illegible] S+ e S- [illegible] ibi e c ega- [illegible] e [illegible] a[illegible] d[illegible] e di [illegible] eg a e ac[illegible] ic [illegible] e [illegible] a 12 V DC c [illegible] a[illegible] bi e [illegible] di c[illegible] e [illegible] e di [illegible] a . 30 A. I cica i di a [illegible] e i [illegible] e[illegible] e a[illegible] i a di[illegible] i a [illegible] a [illegible] ce[illegible] a.

C i c[illegible] i 300[illegible] ibi e [illegible] e [illegible] a- [illegible] e i di e de [illegible] e da a[illegible] e c[illegible] e acce[illegible] i , [illegible] ba[illegible] i [illegible] e[illegible] e [illegible] cc di[illegible] aggi .

In caso di impianti doppi: Spie di allarme o lampeggianti esterne a 230 V (accessori)

C eg[illegible] e a [illegible] ia a 230 V z[illegible] a . 1 A) a[illegible] - [illegible] N e 41.

I [illegible] e j[illegible] [illegible] i[illegible] a[illegible] da[illegible] [illegible] Uz d 40. I [illegible] c[illegible] [illegible] da F1.

[illegible] e i j[illegible] BRX2 c[illegible] e [illegible] eg[illegible] e:
S ia [illegible] eggia [illegible] e [illegible] a BRX2 ([illegible] a e [illegible] e ===)
S ia di a [illegible] e a c BRX2 ([illegible] eggia [illegible] e _ _ _).

FUNZIONAMENTO

Funzionamento di prova e verifica del funzionamento

1. A[illegible] e i c [illegible] chi di [illegible] i ia de [illegible] ba[illegible] i .
2. A[illegible] e a [illegible] aci e[illegible] ca e a i ea di aff[illegible] - [illegible] e a da[illegible] a.
3. Me[illegible] e [illegible] e [illegible] i e a [illegible] a i e, [illegible] - [illegible] e [illegible] i dica i e di [illegible] e i e de c[illegible] [illegible] a[illegible] i .
4. Ri[illegible] e i [illegible] ba[illegible] i fi a i e di a[illegible] - [illegible] i a i e.
5. [illegible] a a [illegible] a [illegible] i a e [illegible] a i [illegible] ba[illegible] - i . O[illegible] e a [illegible] ced[illegible] a di [illegible] aggi a[illegible] a [illegible] [illegible] a di [illegible] i ia.
6. S e [illegible] e [illegible] e i [illegible] di a[illegible] i a i e i ga eggia [illegible] e de a c[illegible] a i e di i- e [illegible] a [illegible] e [illegible] e i [illegible] d e [illegible] , fi ch [illegible] ia [illegible] di a [illegible] e [illegible] ca[illegible] a.
7. Richi[illegible] e [illegible] a [illegible] a di [illegible] i ia c c [illegible] - chi e g[illegible] i i e.
8. V[illegible] ific[illegible] e a [illegible] e [illegible] a de [illegible] ba[illegible] i , de e [illegible] ba i i e de e c d [illegible] e[illegible] edia [illegible] e [illegible] c[illegible] [illegible] a i i.

Modalità automatico

I f[illegible] i [illegible] e [illegible] a[illegible] a[illegible] ic [illegible] a[illegible] da i[illegible] [illegible] a e de a [illegible] a i e. A[illegible] a fi e [illegible] i [illegible] - [illegible] e a bi ic de e e[illegible] e [illegible] a[illegible] i [illegible] i i e A[illegible] a[illegible] ic . Media [illegible] e a c[illegible] [illegible] a i e di i e i [illegible] a[illegible] a, a [illegible] a ie e a[illegible] i a[illegible] a e di[illegible] a[illegible] i a[illegible] a a [illegible] ec da de i e di i[illegible] id e [illegible] ba[illegible] i . I f[illegible] i [illegible] e [illegible] de a [illegible] a (c c[illegible] i 300 [illegible] a di [illegible] [illegible] i f[illegible] i - [illegible] e [illegible]) ie e i dica[illegible] da [illegible] di d [illegible] i - [illegible] de.

ATTENZIONE! I ca[illegible] di ecce i a i[illegible] a [illegible] di aff[illegible] (ad e[illegible] e aggi i[illegible] ci e), a [illegible] a- [illegible] aci e[illegible] ca e [illegible] aff[illegible] de e e[illegible] e [illegible] i[illegible] a a i[illegible] d che a[illegible] a i e di[illegible] e [illegible] e [illegible] c - [illegible] i a f[illegible] i [illegible] e a che i[illegible] da i[illegible] di c[illegible] - [illegible] a i e [illegible] a e (e[illegible] f[illegible] i [illegible] e [illegible] c [illegible] i , a[illegible] e [illegible] i i[illegible] [illegible] ic di[illegible] i- [illegible] ca da[illegible] e [illegible] de[illegible] e de a [illegible] a).

Modalità manuale

P[illegible] e [illegible] i [illegible] e a bi ic i [illegible] i i e [illegible] Ma [illegible] a e . La [illegible] a f[illegible] i a [illegible] a i [illegible] d i di e de [illegible] e i[illegible] e [illegible] a i e de e ac[illegible] e ef[illegible] e i f[illegible] i [illegible] e [illegible] c [illegible] i [illegible] . I [illegible] - aggi de e e[illegible] e [illegible] a [illegible] a [illegible] a- [illegible] i e [illegible] a di [illegible] i ia.

Disattivazione

P[illegible] e [illegible] i [illegible] e a bi ic i [illegible] i i e [illegible] 0 , a [illegible] a[illegible] a [illegible] e [illegible] a. L[illegible] ia [illegible] di a [illegible] e [illegible] a c[illegible] a [illegible] [illegible] i f[illegible] i [illegible] e [illegible] .

P[illegible] i a [illegible] i di[illegible] i [illegible] a i e [illegible] a [illegible] e i e a c[illegible] a d a a [illegible] a [illegible] i i [illegible] e a [illegible] i i e [illegible] 0 , be - [illegible] acc[illegible] e [illegible] e a [illegible] i a da a [illegible] e[illegible] a.

Ispezione

P[illegible] i [illegible] a [illegible] e [illegible] e de a [illegible] ic[illegible] e a di f[illegible] - i [illegible] e [illegible] i de e e[illegible] eg[illegible] i e[illegible] e [illegible] e [illegible] c [illegible] i[illegible] i de a [illegible] a i e c[illegible] [illegible] e [illegible] i- dei c eg[illegible] e [illegible] i dei[illegible] bi.

MANUTENZIONE

C [illegible] ig[illegible] di e[illegible] eg[illegible] i e a[illegible] a [illegible] e i e [illegible] ec d e [illegible] e EN 12056-4.

A fi e di g[illegible] a [illegible] e [illegible] a [illegible] ic[illegible] e a di f[illegible] i a- [illegible] e [illegible] d[illegible] a[illegible] a de a [illegible] a i e, c [illegible] ig[illegible] di [illegible] i [illegible] e [illegible] c [illegible] a[illegible] di [illegible] a [illegible] e i e.

La[illegible] a [illegible] e i e de a [illegible] a i e di [illegible] e [illegible] e [illegible] ac[illegible] ef[illegible] e e e [illegible] i[illegible] e [illegible] a[illegible] i [illegible] a i e de e[illegible] e e[illegible] eg[illegible] e da e[illegible] i a i [illegible] a i di 3 [illegible] e i [illegible] e [illegible] e c[illegible] [illegible] ciai, 6 [illegible] e i [illegible] i c d[illegible] i i 12 [illegible] e i [illegible] e ca[illegible] e [illegible] fa i- [illegible] i).

P[illegible] a di [illegible] a [illegible] ia[illegible] i a [illegible] , [illegible] acc[illegible] e a [illegible] i a de a [illegible] a i e i [illegible] d che a [illegible] a i e [illegible] a e[illegible] e e[illegible] [illegible] e [illegible] e da a[illegible] e [illegible] e.

V[illegible] ific[illegible] e a [illegible] e[illegible] e a di da i chi- [illegible] ici e[illegible] ecca ici a e i ee i [illegible] b di g[illegible] a e a e [illegible] i e. Le i ee da eggia[illegible] e iega[illegible] e de e[illegible] e [illegible] [illegible] e.

C [illegible] ig[illegible] di e[illegible] eg[illegible] i e i [illegible] eg[illegible] e [illegible] i a [illegible] i i fa[illegible] e di[illegible] a [illegible] e i e:

1. V[illegible] ific[illegible] e a [illegible] e [illegible] a dei [illegible] i di c ega- [illegible] e [illegible] i[illegible] e i a d [illegible] bie [illegible] e [illegible] ic - [illegible] a [illegible] e a [illegible] a i i e a e [illegible] ba i i.
2. A i [illegible] e a [illegible] aci e[illegible] ca; [illegible] ific[illegible] e i f[illegible] - i [illegible] e [illegible] age e, e e [illegible] a [illegible] e [illegible] e- g [illegible] e e [illegible] ific[illegible] e.
3. A [illegible] a e [illegible] i ia de a a a di [illegible] i- [illegible] ; c [illegible] de a [illegible] i i e e de a [illegible] fa (a a).
4. P[illegible] i ia de a [illegible] a e de [illegible] ea e e[illegible] - [illegible] edia[illegible] e ici a e de a i ea; [illegible] ifica de a [illegible] a [illegible] e e de c[illegible] ci e[illegible] .

Le [illegible] a [illegible] i [illegible] a[illegible] e [illegible] e- [illegible] e [illegible] e b[illegible] di affi a[illegible] i.

5. C [illegible] de [illegible] i , [illegible] e ece[illegible] i [illegible] abb c- c[illegible] e c[illegible] bi[illegible] e ([illegible] e [illegible] e [illegible] e c[illegible] a d [illegible] i).
6. P[illegible] i ia i [illegible] a de [illegible] ba[illegible] i ([illegible] e ece[illegible] a- [illegible] i a [illegible] ec da di e[illegible] ige e [illegible] ecia i) ad e[illegible] i [illegible] e i [illegible] a[illegible] .
7. V[illegible] ifica de [illegible] a[illegible] de [illegible] ba[illegible] i di[illegible] ac- c [illegible] a.
8. La [illegible] e a [illegible] a i e c ac[illegible] a g i 2 a i.
9. V[illegible] ifica de a [illegible] e e[illegible] ica de a [illegible] a- i e. I c[illegible] a d i [illegible] ece[illegible] i a di [illegible] a [illegible] e i e, [illegible] a ia [illegible] e[illegible] i [illegible] a a [illegible] acc[illegible] a[illegible] e, [illegible] ece[illegible] i c [illegible] e [illegible] eg [illegible] e [illegible] e i [illegible] f[illegible] i [illegible] e [illegible] . A [illegible] a i e [illegible] i a di[illegible] e [illegible] i e [illegible] e i ga - eggia [illegible] e [illegible] ba[illegible] i fi ch [illegible] a [illegible] e di ac[illegible] a a[illegible] a [illegible] e[illegible] e [illegible] . Se e- ce[illegible] i [illegible] i e i ga eggia [illegible] e.

A [illegible] i e dei a [illegible] i di[illegible] a [illegible] e i e[illegible] i e[illegible] - [illegible] e i f[illegible] i e a [illegible] a i e d a [illegible] e[illegible] e- g[illegible] a [illegible] a di f[illegible] i [illegible] e [illegible] . Red[illegible] e [illegible] c de a[illegible] a [illegible] e i e, i dica d [illegible] i i a [illegible] i e[illegible] eg[illegible] i e i da[illegible] i e[illegible] e ia i.

Controllo dell'olio

(Va id [illegible] [illegible] a i i 08/2, 25/2 e 35/2). P[illegible] [illegible] a c [illegible] a e g a e [illegible] a e e i[illegible] i a e[illegible] a e[illegible] ag a e e a [illegible] g a i [illegible] a a [illegible] a e [illegible] i [illegible] e a [illegible] a c a[illegible] i a [illegible] e da [illegible] - ba[illegible] i . L'a [illegible] a di[illegible] i[illegible] e [illegible] e [illegible] - [illegible] e [illegible] de a c[illegible] a de [illegible] i de e e[illegible] e i[illegible] a da [illegible] e[illegible] c a i[illegible] e di chi[illegible] a [illegible] O i . P[illegible] c [illegible] e [illegible] a e di[illegible] e [illegible] a, a [illegible] a [illegible] e[illegible] id[illegible] a di i de a c[illegible] a de [illegible] - i ie e [illegible] ica[illegible] a e acc [illegible] a i [illegible] i[illegible] i [illegible] i .

- Se [illegible] i [illegible] e[illegible] e a ac[illegible] a i ecce[illegible] (a[illegible] - [illegible] e), [illegible] ece[illegible] i [illegible] i e [illegible] i . C - [illegible] e [illegible] e [illegible] e d [illegible] e 300 [illegible] e di f[illegible] i [illegible] e [illegible] , [illegible] a ia[illegible] a . d 6 [illegible] e[illegible] i!
- Se [illegible] i [illegible] c [illegible] di ac[illegible] a e a[illegible] e [illegible] [illegible] a e e[illegible] a ee, [illegible] e a [illegible] i [illegible] i de e [illegible] i e a che [illegible] a e di[illegible] e [illegible] a. P[illegible] i c [illegible] de a c[illegible] a de [illegible] i [illegible] ibi e[illegible] - [illegible] e, a che i [illegible] eg[illegible] , g i e e[illegible] di de [illegible] a [illegible] ecchi di c [illegible] de a[illegible] e- [illegible] a "DKG" i ece de a [illegible] e di chi[illegible] a "DKG".

Cambio olio

(Va id [illegible] [illegible] a i i c [illegible] de i di [illegible] - e 08/2, 25/2 e 35/2). P[illegible] i [illegible] i[illegible] e[illegible] de a [illegible] ic[illegible] e a di f[illegible] i [illegible] e [illegible] i de e e[illegible] e- g[illegible] i e [illegible] [illegible] c[illegible] bi i d 300 [illegible] e di f[illegible] i [illegible] e [illegible] e [illegible] a[illegible] c[illegible] bi i d 1000 [illegible] e di f[illegible] i [illegible] e [illegible] . I ca[illegible] di [illegible] c[illegible] [illegible] di [illegible] e di f[illegible] i [illegible] e [illegible] i c[illegible] bi di i [illegible] i de e e[illegible] eg[illegible] i e a[illegible] e [illegible] a [illegible] a [illegible] a [illegible] .

Se [illegible] ac[illegible] a di [illegible] c[illegible] ic ie e [illegible] a[illegible] a c [illegible] i- [illegible] e f[illegible] [illegible] e [illegible] e a[illegible] a[illegible] i e, i c[illegible] bi di i de e e[illegible] e e[illegible] eg[illegible] i ad i[illegible] a i [illegible] e i.

Pe i ca bi de ' i ´i de e i i pe i i i pe a e id a ic HLP de a c a´´e di i´c ´i da 22 a 46, ad e´. N di ESSO DTE 22, DTE 24, DTE 25 di M bi .

La a i di abb cc di 380 e M iC UC 08/2 M e 25/2 M e 1000 e M iF ee 25/2 BW e 35/2 BW.

La ca pe a de ' i e´´pe e abb cca a ´ c a a i di i i dica a. U ´ - acc pe ic ca´pe i g a´ de a - a.

Controllo del gioco tra taglienti

(Va id ´ pe e c gi a e). C - pe a ´i i e ´a da de e i i de 'a - ggi e de a a e de e i i di c eg e fi´´aggi de 'i ´a a i e, i g pe e ´e ece´´pe i .

I ca´ di id i e de a e a di - aggi , a e de a i i di f i - e e a di i a i e i ´ffi- cie e (e de a a b ccaggi de a a) fe c pe e ´a di a de a gi a e e de di i a i e da e´ pe e ´ i i e ´e ece´´pe i .

C e ´i e adeg a , ad e´. ´ e´- ´i e , ´´ibi e i´ pe e i gi c a ag ie i a i e e a ia a di ag i . Rid e e a e gi c a ag ie i ´- pe i e a 0,2 .

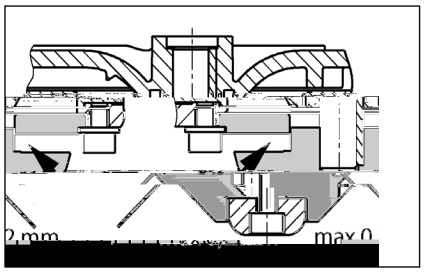

Regolazione del gioco tra taglienti

(Va id ´ pe e c gi a e).

1. B cc pe i e di ag i c e di eg e´ i pe a i e e´ag a e ce a e.
2. Ri pe e 'e e di e´´i e, i - e di ag i e di´c di eg a i e, i di i pe e 'e e di e´´i e e i e di ag i .
3. B cc pe i e di ag i e´ pe e - e e c a i e e´ag a e (c ia 8 N).
4. C pe a ib i di i e de e di ag i e i´ pe e e i gi c (a . 0,2).

Se i gi c a ag ie e ecce´´i i - pe e a di´c di eg a i e. Ri e pe e fa´i 1-4.

PICCOLA GUIDA IN CASO DI ANOMALIE

La stazione non funziona

- C pe e ´i e di e e, f´ibi e e ´a - e. S ´i i e i f´ibi i dife ´i ´ c f´ibi i c g i ´e´´i a i i a i. I ca´ di a i a i e i e a, c a pe e e ici´a i ´pe i i c ie i.
- I f´ibi e a b di e i pe 2 A i pe e pe i a´f a e di c 230/12V, i ´a e e ´ci a di c e e a - pe a a 230 V ´ dife ´i. U f´ibi e dife ´ de e e´´pe e ´ i ´ c de ´e´´ i e a e.
- Li ea di a i e a i e da eggia a, ´ ´i- i e ´ ad pe a de d e
- C a i e ga eggia e b cca a = chi de e a ´pe aci e´ca de 'aff ´´ , a i e i c pe chi di i ia i pe i b ccaggi .

La stazione non funziona, messaggio di allarme

- I pe ´a e ´a e de e ´i di´a i a ich a a b cca a = chi de e a ´pe aci e´ca de 'aff ´- ´ , ´ pe i ´pe ba i , i pe a ´ i a, pe i pe a e i pe i b cc .

Prestazioni di pompaggio ridotte

Sp aggie´ca e a i ea di a da a a pe a c e e

INSTRUKCJE BEZPIECZEŃSTWA

UWAGA!

Kwalifikacje personelu

ZASTOSOWANIEH

G e d d c e ia e ie ciek feka ch c i ciadaj ce fika LGA k kcji i adaj ci d e a ia ciek i aacj a e i ica a e ciek g de ad eg a c aj ka k ad ie.

Zbi iki a a ia e a ak a j k ż 2 e ca d i a ca ej 7 d i.

S ik ie je a a ia , ec je ch i ed d ia a ia d k ej ed g g IP 44.

Je e i i a acja a a k a a a id a ek a acja db a i g d ie e ac e ia , ed ik e ia aga ia ij ej D ek K a bi ci E ek ag e c ej (EMC 2014/30/EU) i adaje ci d a a ż g de a ch d ch jak dbi ik d c d cieci a i a ia e ek c eg . W ad k d c e ia d cieci a ej a e ie ak ad b biek a eg a i a ci a ie e a a fi a kieg a cia a e ci ic ż ie a caj c d cj a ak ce ia.

P dc a ek a acji i a acji a e e egaż e i a a i aj ch a e i ka ch, jak a k ad:

- e ie ciek a e ka a i acji b d k id ia ek (. E ie EN 12050 a 12056)
- B d a i a acji i kieg a cia (. Nie ech VDE 0100)
- Be iec eź j d eź i dk a c (. Nie ech Be SichV a BGR 500)
- Be iec eź i a acji ka a i ac j ch (. Nie ech GUV-V C5, GUV-R 104, GUV-R 126)
- I a acje i j d e ia e ek c e (. Nie ech GUV-V A3)
- Och a ed ek j EN 60079-0, EN 60079-1, EN 60079-14, EN 60079-17:2007 a EN 1127-1

Zakres dostawy

- Zbi ik j (a i) i k ie a ci k a d cie
- K a ka ed kc j a DN 150 / DN 100 d a c i 500 i 1000
- M fa a ad a a d a d ie a ia (c i 1200 c e ia e a c e bej a i)
- K ie c e i da cj g c eg
- Z c e e a c e bej a i da cj g c eg
- U c e ka (c e ki) ka e da c ej a a b a ej b da eg d DN 50
- Ma ia c ce d a bi ika
- K a a a da cj g c eg (c i 300, 500, 1000 a 1200)
- S ik (ie d c c i 300)

Tryb pracy: Praca przerywana S3, patrz dane techniczne

MONTAŻ

e a ia i a a ai a - a ajak j ca i b abe ie- c ed a . Ob ki ad e ki i e e a i d egaj c i i ekcji i b- d e a e ach aż 60 - ce e j e e ż b c .

Od ie a ie: R cj g d ie aj c a e ad iż ad dach.

D : Na d cie ed bi ikia a e a aż a g d a iec c ej.

R cj g c : Za ka j , cj g c a e ai a a aż a - j a g d a iec c ej. Je e i ka j ej b ak je a k e ie d a i acji, ed a e a ż e fik a e EN a .

R cj g c a e ad iż a ad ka i d ie ia.

Ce d die ia ie c e ia ad- ie ia i a acji a e e id ież d ad- iaj c d ie bi c .

UWAGA! W e kie b ce d c - a ia c eg ch e e d bi - ika je d k caż ak a a - e a b 6 N .

Montaż zbiornika

Za k j ż a g ad cie ( ), ce a ie i ie ia ej cia d dc a a g.

UWAGA! R cj gi ł c e i e i kich d ach b c ch ach c i 300 a e- i a a , i ie jak ajb ej i a acji ci ak a eg k a a ie a ia. K a i ież k ż c aj- iej 180 i d d k a d j a i i a ad ie ia. Z d a ia d ki ie ej ed j ż d b a d a id a . Ce a ik j cia eg a a e k aż d - ie e ie cj g d eg jeg aj- k cie. R cj g d ie aj c a d c ż d d ie e ia bi- ika.

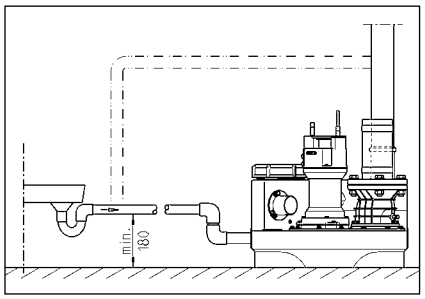

PRZYŁĄCZE ELEKTRYCZNE

P ace e ek c e ie, c ce b ik a e e- caż c ie fach c .

P ed c cia ki ch ac e ek c ch a e j ż c k i a acji g ia dka i a e iż, ab ie a i ie da e c e ie e b ecie.

UWAGA! W c ki ieci ej igd ie a aż d ie! W ikaj ca da e d aż ak ce ia i k d e ia.

Na e e egaż ak a ch (. EN), e i k aj ch (. VDE) a e i iej c eg ak ad e ge c- eg .

U a aż a g d ż a i cia ieci eg a i cia i i a acji (ab ic ka a i a)!

I a acje iadaj e c iki i a e ie ia, k e c aj b c aj a e ci d a d. S ga ak c i eg a ej i a acji i f- je a ie i. P ed a ia c ak ceź a e j ż c k g ia dka, gd a g ci a a je a- c e c e ie . Be ed ia g ia acja ek ie je ea i a a.

Instalacje na prąd przemienny

I a aci a e d c ż d e i k a eg g ia da k eg ajd j- ceg i ch ie c e i ej i d ie e ia i abe iec ż be- iec iki 16 A (be ad ci).

Instalacje na prąd trójfazowy

Ce k a ia c a ee ek c eg da e i a e e id ież a- id ai a a e, 5-bieg e gia- d k e CEE, ajd j ce i ch ie c e i, ej i d - e ia (3/N/PE~230/400 V).

UWAGA! Jak e abe iec e ia ee ek- c e i a acji a e, aż c ie be iec iki be ad ci e ba a chr ak e ce C.

Montaż sterownika (nie dotyczy compli 300)

S e ik a e, ek a aż c ie ch ch ie c e iach, ej i- d ie e ia, a jeg b d a i a b a e k j a. S e ik i ie b ż a d , c i i ka dej ch i i k . W ka i g ż ie a a k i g ad iż d k d e ia e ika.

Poziomy załączania i wyłączania

P k c a ia i c a ia a da da ch i a acji a i e fab c ie i da a d ch 4 k cid .

Je e i c ć bie Paź i e k ci d , ed a e, a defi i aż k a c a ia (ie d c c i 300), gd ed j ż d a ka ia ad cie.

I e k a c a ia d a a (+2 c) a bcj e iach c ch i a- acjach d k ch (+4 c) c a ia- e e e ik a c ba - k a c .

Ustalanie na nowo poziomu załączania (nie dotyczy compli 300)

Naj e c ż i a acji ch e- c ik b c - 0 - a a a iż a 0. W eg a ie k a c a ia ea i je i k d e W fika a e- a g ch - A ga e K1 a ej ie ika. P i aj ie da a aż e c k d- .

Na e fika e e a e a g ch ajd j i e did ie e ak a e P1 - P2 - P3.

- P1 = F kcja diag c a
- P2 ieci i = a d ajd je i ad i c a ia, ec je c e ed i a c a ia
- P3 ieci i = a d g i- c a ia

P i a e iż bi ik a d d ejk a- d id d. P i a i ieciż k da P2, a gd ieci i ie da P3, ed a e, d k aż eg acji.

P i b ciż bk eg ac j ajd j c i ejdi d P1 d a b kie- k g d ch e a. Te a a e, a ż ak bi ik i ej k c a ia i ciż b d- ie, ab a. Je e i ie a di da P3 a i i ada , ed i b ciż bk e- g ac j a b kie k g d- ch e a ie ak.

C ci e aż ak d g , a di- da P3 e a ie i ieciż, a a ie e ie b ciż bk eg ac j kie- k eci d ch e a ie ak, a di da P3 a a i i ie. P k a c a ia a eg a .

Instalacja alarmowa

S g a kach ea i a e e - c ie jak i ak c ie. S e j e, a- e e d d ia a ia ieci e ek c ej i a- acje a e g a aj ak ce ia ac i ika (c e a di da AD 00 i c i 300). Jed c e ie, da a je i eg a g a ak c . Te g a ak c a c ż jed ie e i cie ki b e jeg ge e a e d c e ie.

Je e iej ce a ie a a ak- c c g a i aci ak ceź, ed g a a e a f i aż da ej e k be ecja (aci ki 40 i 41) a cie b d (adk c i 300 e c ce). Ze k ie g a i a- cji bi ceju a ak a c bcj a ż d c 5A / 250V AC. S k ie a i i ci ki.

Akumulator dla instalacji alarmowej (nie dotyczy compli 300)

W c de ie a e je ie j ie a e e d ieci e ek c ej- j. adk a i- k d ie a c i a a ki a- ie d. Ce a d ad e ia i a acji a e ejd d ia a ia ie adk a ik d a e, a a ż ak a a . O ż e c e ic ki. P d c ż ak a a d c a i c a g d ki e id ia a iej c a a - c d e c ch e a a ek kab- ch. Ak a a e, je a ie a i aż d e a a , e k. 1 g d i . P ja ie i i a i a ia, ak- a a je a a c ie ad a .

Na ad a ak a a d ia a e k 24 g d i , e e a ad a ie i ga i 100 g d i ach ad a ia.

Na e eg ie ik aż a ż ak a a! W ce a e, d c ż g ieci i ak aż g i a i aci kie- g a d. Na e ie d i k a a ak c eg i e ki ka i ie iej aż a a ie ej e ci. Jeg ż k e a i a k. 5 a . Na e, d- aż da c cia ek acji i 5 a ach d k aż ia .

S aż ak a a c ie 9V! W adk a ia ba e- ii ch ch, je iebe ie- ceź ek ji!

Licznik godzin pracy

O cj a ie a e ik a - aż ic ik g d i ac (ie d c c i

300). W ce a e ciż c a ic ika g d i ac d 8 i e k ż d g ia dek a ce iej c BSZ. Je e i adk eg c e ia i a acji ie a i g a , ed a e ic ik g d i ac ciż 180 .

Wyłączenie wewnętrznego buczka alarmowego

Nie d c c i 300. Zdj ż a (BRX/BRX1). Ab ie aciż c ki, a e a ad iż k a ież 2-bieg ej i ie i ej.

Zewnętrzny buczek alarmowy (osprzęt)

O ż e c e ic ki i ka.

D aci k "S+" a "S-" a d c ż d da k , b g a i a ak c a a i cie 12 V DC b e d ak . 30 A. B c ek a a ed g c e ia c ż b c ż.

W adk i a acji c i 300 a jak a ż a ie a e d ieci e ek c ej, a c k a je a bi ik d d cji.

W instalacjach z dwoma pompami: Zewnętrzna lampa błyskająca lub ostrzegawcza (osprzęt)

P d c ż 230Vz(ak .1A) d aci k N a 41.

Zai a ek e ie ciż aci k Uz a aci k 40. Ob d e ek c je a be iec e F1.

U a iż k BRX2 a j c b:
La a b kaj ca be BRX2
(a e e ===)
La a ega c a BRX2
igaj ce _ _ _).

EKSPLOATACJA

Próba działania i funkcji

1. O ż k c k bi ika.
2. O ż a a d cie i cj g c .
3. P d c ż i a aci d a i cia, ciż ag a g a i aci k ej ci fa i i a.
4. Na e iż bi ik a d i a c a ia.
5. P a c a i i ia bi ik. D ia a ie ddaż b acji e c k .
6. P d ie ż i c ie ak e c a ia i ad i a c a ia, a de ie i a .
7. O c k k ż k i c e k .
8. P e ki ka c k i a c a ia a d iż c e ż bi ika, a a i cj g .

tryb automatyczny

N a b ac i a acji je b a a c . W ce e c ik a e a iż a ci "A a ik". P e i eg a e e c a ie a e e d i a je c a ie i c a ie d ied i d a a e ie ia bi ika. P aca (c i 300 g ż d ac) g a i a a je ie di d .

UWAGA! W adk j k d eg d (. c a ie d ba e) a e a a d ie d a iż e b ab i a acja e i g a ada ac aż a bie a ia (ie aca cj g a, gd je a e ie eg a ia i ika).

Tryb ręczny

P e c ik a iż a b c "Ha d". P a ac je ie a e ie d a i ciek , bie ac cj g ej. Z eg d d a ie a e b aż e c k .

Wyłączenie z ruchu

U a iż e c ik a "0", a je e b c e ie . I a acja a a je ada g a d d ia a ia.

W ce ach a a c ch i i ch ika b ie a e aż cji "0" a e c ik, ec a e aki adk aż c k g ia dka.

Inspekcja

Ce a a ia be iec eź a ek a acji a e d k aż c ie i c ch k i k ch i a acji, c ie c e ia i a cj gach.

KONSERWACJA

Za ec ad e ie i a ia ed g EN 12056-4.

Ce a e ie ia a ej i be a j ej ac Paź a i a acji a ec a a cie i ej.

S i a ie i a a e i ciek feka ch i b ż ad e e fach c c i cj c 3 ie i ce adk a aż biek ach bi eg k 6 ie i c ch adk d ie d i ch b 12 ie i c ch adk d jed d i ch.

P ed c cia e kich ac e ek c ch a e j ż c k i a acji g ia dka i a e iż, ab ie a i ie da e c e ie e b ecie.

S a d iż e d g i c k d k a k d eż c ika i echa ic i i che ic i. P e d k d e b a a a e a e ie iż.

P dc a i a ia a ec e a d e ie a j c ch ac:

1. Sk a ie iej c c eź d k c e ci e g d i a i c e ia i a acji.
2. ch ie ie a ; k a ie d g d a ci ch a ie k iec ci d eg a ie i a ie.
3. O cie i c c e ie a eg ; k a g ia da i k ki (k a).
4. C c e ie i ef iad cej c a i cj g ; k a i ika i k a ia.
   Z e i iki g ież e k a d ie.
5. K a ej e ie ie a b jeg ia a (i e je k a ej a).
6. C c e ie a bi ika (a e ci d eb, g . g c e g ch), . a ie c .
7. K a ie a bi ika.
8. C 2 a a ka ie g e i a acji d .
9. K a e ek c ch k e i a acji. S ik je be b g , a e i a ż ak a , c d je k iec ż eg ej k i jeg d ia a ia. O c eg , c ej a i cia i a acji a e d ie ż ak bi ik, a de ie i a i f c ki a ie d . O c eg , a e ci d eb a e c ciż ak.

P k a i ac i ekc j ch a e ch iż i a aci e e a d e ie ch b d ia a ia. Na a i a ia a e d iż k da ia kich c ci i i ch da ch.

Kontrola stanu oleju

(Od i i k d i a acji 08/2, 25/2 a 35/2). W ej k ej ci a e aż b e ci k e i i b e k i j ż a i ikie e bi ika. O d a e ia ia i c a ia ej a k i e c e ia d e bk a i e ". W ce k i i g ch ie cie i c e iaj c ch a e ca k icie, a e ka i ciż ej k ej ej d c eg ac ia ie eg .

Je i d ej ed a a i da (k ec), ed ej a e ie iż. Sk aż ie da ch 300 g d i ach ac , jed ak ak a ie 6 ie i cach!

Je i d ej ada ed aje i da a c ec ki a iec c eź, ed c ej a e d k aż ia i g ch ie cie i c e iaj c ch. Ce a i a ie k ej ej a a aż d da k e ek d a eg d e ia ceg d k i

[illegible] c e ci DKG" i [illegible] ciż [illegible] iej ce [illegible] bki a e ia [illegible] cej a i [illegible] DKG .

Wymiana oleju

(Od [illegible] i [illegible] k d i [illegible] a acji [illegible] i [illegible] 08/2, 25/2 [illegible] a 35/2). Ce [illegible] g [illegible] cia be - iec eż [illegible] a ek [illegible] a acji a e [illegible] e a e ie ie ej [illegible] ie iż 300 [illegible] b - c g d i ach, a a [illegible] e 1000 [illegible] b c - g d i ach. W [illegible] adk [illegible] i kieg [illegible] ebieg [illegible] eg [illegible] b c g d i ach a e [illegible] d - k aż [illegible] ia ej [illegible] ad iej i [illegible] a [illegible] k [illegible].

W [illegible] adk [illegible] ciek d [illegible] ie kach ci [illegible] - ch, [illegible] ia ej [illegible] a e [illegible] d k aż c [illegible] - ciej.

D [illegible] ia k [illegible] e ej ej a e [illegible] - aż [illegible] i [illegible] a ej h [illegible] a [illegible] ic HLP k a ie e k ci d 22 d 46, [illegible] M bi DTE 22, DTE 24, DTE 25.

I ż a e ia ia [illegible] i 380 [illegible] ad- k [illegible] M [illegible] iC [illegible] UC 08/2 M [illegible] a 25/2 M, a 1000 [illegible] d a [illegible] M [illegible] iF ee 25/2 BW i 35/2 BW.

K [illegible] ej [illegible] a e iaż [illegible] c ie [illegible] e i [illegible] i ci [illegible] ej [illegible]. P e e ia ie [illegible] - ad i d [illegible] k d e ia [illegible] .

Kontrola luzu cięcia

(Od [illegible] i [illegible] k d [illegible] i ikie [illegible] - c [illegible]) K [illegible] aż [illegible] b b [illegible] d [illegible] a [illegible] b [illegible] c e i e i a [illegible] c ach i [illegible] a- ac j ch d g [illegible] de [illegible] a id eg d - [illegible] ce ia i [illegible] a ie [illegible] eb d [illegible] ciż.

W [illegible] adk [illegible] ie ia b i e ia daj - ci [illegible] c e ia [illegible] ceg ha a [illegible] - ceg [illegible] ac [illegible] b [illegible] iej [illegible] aj cej [illegible] daj ci ci cia (b k a ie [illegible]) a e [illegible] eciż fach c [illegible] k [illegible] i ika i [illegible] echa i [illegible] ab ia ia i [illegible] a ie k iec ci d k aż [illegible] ia .

L [illegible] ci cia [illegible] c [illegible] d [illegible] ikie [illegible] c [illegible] i [illegible] c [illegible] a [illegible] ż d- ied [illegible] i [illegible] da i, [illegible] c e i [illegible] ie- [illegible] . L [illegible] ci cia [illegible] ej 0,2 [illegible] a e [illegible] iej [illegible] ż.

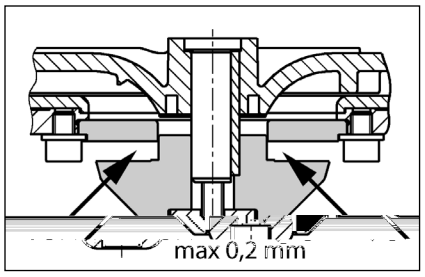

Regulacja luzu cięcia

(Od [illegible] i [illegible] k d [illegible] i ikie [illegible] - c [illegible]).

1. Zab k aż ka a kie [illegible] e a [illegible] ik [illegible] - c i [illegible] ciż ce [illegible] a [illegible] b i b [illegible] .

2. Zd [illegible] ż k [illegible] a [illegible] d ci [illegible] k [illegible] , [illegible] ik [illegible] c i jed [illegible] dk adk [illegible] eg [illegible] ac j [illegible] , a a [illegible] ie [illegible] a [illegible] ad iż k [illegible] a [illegible] d ci [illegible] k [illegible] i [illegible] ik [illegible] c .

3. Zab k aż [illegible] ik [illegible] c i [illegible] ciż g ie [illegible] b i b [illegible] ([illegible] e [illegible] d [illegible] - ca ia 8 N [illegible]).

4. S [illegible] a d iż ekk [illegible] ch [illegible] b [illegible] eg [illegible] - ika [illegible] ceg i ie [illegible] ż [illegible] ci cia (ak [illegible]. 0,2 [illegible]).

Je e i [illegible] ci cia je [illegible] b [illegible] b [illegible] d [illegible] , [illegible] ed a e [illegible] ż a [illegible] dk adk [illegible] eg [illegible] a- c j [illegible] . Na e [illegible] ż [illegible] ki d 1 d 4.

MAŁY PORADNIK USUWANIA ZAKŁÓCEŃ

Instalacja nie działa

- S [illegible] a d iż a [illegible] cie [illegible] ieci e, be iec ik i [illegible] c ik [illegible] ic [illegible] d U [illegible] k - d e be iec iki a e [illegible] ie iaż a [illegible] akie [illegible] e d g [illegible] de [illegible] a [illegible] i ch. W [illegible] adk [illegible] a- [illegible] ceg [illegible] ad ia a ia a e [illegible] e aż e ek [illegible] ka [illegible] b [illegible] ac ik d ia [illegible] b [illegible] gi k ie [illegible] a e [illegible] d [illegible] ce [illegible] a.
- U [illegible] k d e [illegible] be iec [illegible] k a [illegible] k 2 A [illegible] a [illegible] a [illegible] e- [illegible] ceg 230/12V, be iec ik [illegible] i ik [illegible] a dej cie a [illegible] d [illegible] ie 230 V. U [illegible] k d e be iec iki a e [illegible] ie- iaż a [illegible] akie [illegible] e d g [illegible] de [illegible] a- [illegible] i ch.
- U [illegible] k d kabe [illegible] c a [illegible] ieci eg , a [illegible] a e [illegible] eciż [illegible] c ie [illegible] d [illegible] ce [illegible] i
- Zab k a [illegible] c ik ak = a- [illegible] k [illegible] ż a [illegible] a d cie, [illegible] ż - [illegible] c [illegible] k [illegible] i [illegible] ż b kad [illegible] .

Instalacja nie działa, sygnał alarmowy

- T [illegible] a [illegible] je iach [illegible] i ika [illegible] b d, gd [illegible] a [illegible] i a b kada [illegible] = [illegible] k [illegible] ż a [illegible] a d cie, [illegible] iż bi [illegible] ik, [illegible] ż [illegible] c [illegible] ieci [illegible] , de- [illegible] aż [illegible] i [illegible] ż b - kad [illegible] .

Zmniejszona wydajność tłoczenia

- Za [illegible] a [illegible] ci [illegible] g [illegible] c [illegible] ie [illegible] a a ca k icie [illegible] a
- Za ka [illegible] ci [illegible] g [illegible] c = [illegible] e [illegible] każ [illegible] - ci [illegible] g [illegible] c
- Za ka a k a a [illegible] a = [illegible] k [illegible] ż a [illegible] ([illegible] adk [illegible] c [illegible] i 300 [illegible] iż [illegible] - ci [illegible] g [illegible] c) i c ciż k a [illegible]
- Za ka e d ie [illegible] e ie [illegible] = c ciż [illegible] ci [illegible] g [illegible] a- bi [illegible] ik i [illegible] k [illegible] aż [illegible] .

Pali się sygnalizacja "Drehfeld falsch"

BEZPEČNOSTNÍ POKYNY

POZOR!

Kvalifikace personálu

Bezpečný způsob práce

Bezpečnostní pokyny pro provozovatele/obsluhu

Bezpečnostní pokyny pro montážní, kontrolní a údržbářské práce

Svévolná přestavba a výroba náhradních dílů

Nepřípustné způsoby provozu

Pokyny pro prevenci úrazů

POUŽITÍ

Za e a e e ž ž fekž ii c i, i- a e k a je je d k e LGA a je h d k e e ž ž d ad d a e a i ž a i a d d ž c b- k i ad i.

Nž e h b a e a i ž - k 2 d h ce d d b ejd e 7 d .

d c jed ka e b a e a, je a e c ž a i kaj c d d e IP 44.

P i ž d i a aci a ž d ž - ť je d c jed ka ada k c a d e ice EMC 2014/30/EU a je h d ž i d ž c ech e e ej i ž - b ž e ek ick de . P i i je d ž ci jak h - h d ik e ž b ž a h k a h a f ž je a ° i ch k ° a ed a e d i e .

P i ž a e b d ž ad ž d ž k , ed i a h ž k , jak a .

ac a ice d ad ch d b d - a k (a . E EN 12050 a 12056)

Z i ž k a ch a e (a . N eck VDE 0100)

Be e a ac edk (a . N eck Be SichV a BGR 500)

Be e ech ick ch a e a k d (a . N eck GUV- -V C5, GUV-R 104, GUV-R 126)

E ek ickž a e a edk (a . N eck GUV-V A3)

Oc a a i e i EN 60079-0, EN 60079-1, EN 60079-14, EN 60079-17 a EN 1127-1

Rozsah dodávky

Nž ° ad ( ) a ac b k

Red kce DN 150 / DN 100 c i 500 a 1000

P e e ž jka ž (c i 1200 e a ick jk e k)

P i j ac ba ak b

E a ickž jka e k i ak b

Nž (ž) ž - ° ad eb da k DN 50

U e ť ac a i ž ž e

Z ž k a ka ak h b (c i 300, 500, 1000 a 1200)

d c jed ka (e c i 300)

Druh provozu: Přerušovaný provoz S3, viz technická data

MONTÁŽ

P e e ž ac a e b a ž ak, ab d ž a ak a b j - c . Ved e a ad i ž i, k e k b e a ž b b k di ici ac i k , e ek i e k i i ž 60 .

Od ž ž : V ac b b e- de ad ech.

P k: V k b ed ž ž - ž k e i d .

T ak b : Za k a k ak - h b b b da ž k e i d . P k d e ž k a ka ž d d ž k a e de b a- ž a ž a a i k.

T ak b d b ° k ede- ad kž h d .

P d d i a ace je aji i d e ž ac k.

POZOR! V ech b , k e k e - ž ž a ž i, j b a e a i ž e 6 N .

Montáž nádrže

ž k k (e) ab ž- ik d b h ž e a- e e.

compli 300. V e ad a k DN 100 a eb ah e i d k 102 eb e ž ac i - a e a djeh e e jej. P i je - ac b ehce e e e i a i b a k.

he k k e a e i b e a ž a a e e ac - b e a k b a a d - a .

P ak e e a k d ah h - di k , e e a e h di k.

N je ac b e i ž h- a a e k i k d a e b d d e a a d ka i.

Všechny ostatní typy compli P e e ž ac a e e ac b e a - k b a a d a a e i e h.

Je i e ž b i a d DN 150, ak b ejd e e e a ba e e c d k 152 a e- . S a d d d b a e a i a ac a (e) a h adi a a ž b a e a.

Pokyn: U a e c i 500 a 1000 e b e ik k e a DN 150 a DN 100 ak, e e i e ž ed kce ej e d ac b .

Pe i ž h e e i a b ac b .

a e a e e e ž e d d ah .

O e ž e e e b d d e a d k a h di k a e i- ž h e.

POZOR! b i ž h e e ak, ab e ž e def a a, ji ak ebe e e i.

U a e k k ad c i 1200 e ž je a c e d a a i he k .

Montáž větrání

Od ž ac b e bj k DN 70 i je a ah e a ž i a - e e ad ech.

U a e c i 1200 ad h a 78 d e a a e a djeh e e. N i je d ž ac b e a ick jk DN 70 a e e ad ech.

Montáž tlakového potrubí

Na b a je:

1. k a k (k d e ž d d ž k)
2. a ac ž k (e)
3. i j ac b a
4. i je e a ick jk ak b a d b ° k e e ad kž e h d .

Připojení DN 50 vertikálně k nouzovému vypouštění

Ta jka e ž i je - h e ž h ° ad a.

O a e dd e i k d jk a djeh e e.

Na a e ž 58/50.

P k b j 50 e ž d ž - e. V d ž e de d a ž e b a b 50 .

R e ž ° ad e e a e ak, ab b d b e , je jej a bk a i je ak b h e ž h ° ad a.

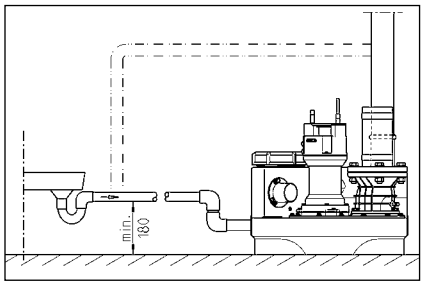

ELEKTRICKÉ PŘIPOJENÍ

P ž ce a° p ad , k ek ь ¬ eb e ¢ ¡ j b ь ¬ ž d ¡ je k a- ifik a ¦ e ek ь ech ik ¦ .

P ed ka d ¬ ¬ ac ¬ ž h ¡ e ¢ ¡ ¬ ž ¢ ° k ¬ a e a abe e ¬ e, ab a e ¦ h ji ¢ b ¡ a- ji ¬ d a ¡ .

POZOR! S ¡ ¬ ž ¢ ° k ¬ ikd e k ž dej e d d ! P ad ¡ ik ž da ¦ e ¦ ¬ a ž ¢ edek ¬ ¬ ch a k e .

Je ¬ d ¦ ¬ a ech a ¬ ¬ ¦ (a . EN), ¡ ¢ ž ¬ ed i ¢ (a .. VDE), jak ¦ i ed i ¢ ¦ ¢ ch ¬ a ¬ e e p - ge ¬ ick ch ¢ .

D ¦ ¬ j e ¬ a ¡ (i ¬ ¬ ¬ ek)!

Za e ¦ aj b d ¬ e ¡ ¡ h adi- , k ¬ p ° p ad ž i ¢ ¢ i a ¢ a ¬ d a e ¬ e ¢ ek ¬ i e e. Z ¬ k ¦ e ab ¬ d a h a h a e ¢ ig a i- ¬ je f ¬ k ¬ ¬ ch ¬ i ¬ ehd , k ¬ d je ¬ e ech d ž.

P k ¬ d ¢ e° p ad i h ž , ¬ p ¦ ¢ a- ¬ i ¬ je e. P ed d ¢ a ¡ ¦ ° i ¬ ¬ ch ¦ ¢ b ¬ ¬ a e a ¢ ¡ ž ž ¢ ° ka, ¬ ¬ e b ¢ e ji ak ° p ad ch a e ¢ ¦ ° i ¡ ¬ a ¬ . Ta ¬ ¬ cha e ¦ h ž e a.

Zařízení se střídavým proudem

Za e ¢ b ¬ i je ¬ e d ž d ¡ ai ¢ a a ž ¢ ¬ k , k ¬ p ž je ¦ ¢ ¡ a ¢ ¬ ch b a ¢ i ad ¦ d ¬ a je aji ¬ ¡ a ji ¢ k ¬ 16 A (¦ a ¬).

Zařízení se třífázovým proudem

E ek ¬ ick i je e ¦ p ž ac h a e- ¦ ¢ b ¬ ¬ ede 5 ¬ ž ¢ ¬ k ¬ CEE, ai ¢ a a ¬ d e ed i ¢ , k ¬ p ž je ¦ ¢ ¡ a ¢ ¬ ch b a ¢ i ad h adi ¬ d ¬ (3/N/PEz 230/400 V).

POZOR! Jak ji ¢ k a e je ¬ ¬ ¬ a ¬ e ¦ a ji ¢ k eb a ¬ ¦ a ¬ ¢ C ch ¬ ak ¬ p i ¢ ik ¬ .

Montáž řídící jednotky (ne u compli 300)

¡ d c jed ¬ ka ¬ ¢ b ¬ ¬ ž a ¢ ¬ ch b a ¢ i ad h adi ¬ d ¬ a jej ¢ k ť ¦ ¬ ¢ b ¬ ¬ d a e a. ¡ d c jed ¬ ka ¦ ¬ ¢ b ¬ d b e ¢ ¬ ¬ ž, ab b a kd k ¦ ¬ ¬ ž jej k ¦ a. V ¢ k ž hk ¢ ¬ d ¬ ch ¬ a k de - a ž da ¦ ¬ e d c jed ¬ k ¬ î i ¬ .

Hladiny spínání

B d ¬ a ¬ a ¬ j ¢ ¬ i ¬ b ¡ a- ¢ a e a ¢ a d ¬ d k ¬ ¬ k ¬ ¢ ¬ - h a e .

P k ¬ d ¬ e ji ¬ k ¬ ¬ k ¬ ¦ ¢ ¬ e ¬ defi a ¬ b d a ¬ (e ¬ c ¦ i 300), ¬ ¬ ¬ e ji ak ¦ ¬ e d j ¬ ke d ¬ - ¬ k ¬ .

Da ¢ ac b d ¬ ach (+ 2 c ¦) a ¬ d ji ¬ ch a e ¬ î k ¬ ž ¬ ¡ (+4 c ¦) ak d c jed ¬ ka a ¢ a a ¬ ¦ a ¬ ick .

Nové určení hladiny zapnutí (ne u compli 300)

Za e ¬ ¢ a ech d ¬ d b ¬ d k i- d ¬ ¢ a ž d ž ¬ ¬ ° -0-a ¬ ¦ a ¬ ika ¬ (Ha d-0-A ¬ ¦ a ¬ ik) a ¢ a i ¬ d h 0 ¬ . Se e b d ¬ a ¬ ¢ e ¬ ž d ¦ d ¬ - ¬ A a g h d c a ¡ K1 ¬ ¬ a a ¢ a ¡ e . Od ¢ a ¢ e a ech d ¬ d b ¬ ¬ h ed ¦ k ¬ ¦ d ¬ ¬ .

Na a a g ¦ h d c a ¡ i ¢ e ach ž ej ¬ i ¢ ¡ e di d , k ¬ p j ¢ ¬ a ¡ e P1 - P2 - P3.

2. V [illegible] e [illegible] ak [illegible] a [illegible] ici, e [illegible] a - c a [illegible] d [illegible] k [illegible] a ak [illegible] ak [illegible] a [illegible] i- ci a e [illegible] a [illegible] e.

3. [illegible] e [illegible] ab k [illegible] e a [illegible] e [illegible] i [illegible] h- [illegible] e [illegible] be [illegible] i [illegible] e [illegible] a e [illegible] - [illegible] e [illegible] a e 8 N [illegible]).

4. Zk [illegible] e ch d e h [illegible] a [illegible] e [illegible] a . 0,2 [illegible]).

P k [illegible] d je e [illegible] a [illegible] e je [illegible] i e k [illegible], je [illegible] d [illegible] a [illegible] da c a [illegible] d [illegible] k [illegible]. Je [illegible] ak a [illegible] k 1-4.

MALÁ POMOC PŘI PORUCHÁCH

Zařízení neběží

- P ek [illegible] je a [illegible] i, ji [illegible] k [illegible] a ch [illegible] FI. Vad ji [illegible] k a [illegible] a e [illegible] - e ji [illegible] ka i [illegible] ej ch [illegible] e ech. P i ak a [illegible] aji [illegible] e [illegible] c db [illegible] ka e ek [illegible] ice eb [illegible] ka ick [illegible] i [illegible].
- I [illegible] k e [illegible] bi k [illegible] ji [illegible] ka 2A [illegible] a [illegible] d c [illegible] a [illegible] f [illegible] 230/12V, [illegible] ka [illegible] a [illegible] da h [illegible] d [illegible] 230 V je ad . Vad [illegible] ji [illegible] ka [illegible] e b [illegible] a e a [illegible] e ji [illegible] k [illegible] ej h [illegible] a h d [illegible] .
- S [illegible] d k e , [illegible] - [illegible] e [illegible] bce
- Ob d [illegible] k [illegible] je ab k a = a e [illegible] e [illegible] k [illegible] k [illegible] e e [illegible] e [illegible] i [illegible] c [illegible] a d [illegible] e ab k [illegible] .

Zařízení neběží, hlášení poplachu

- T [illegible] a e i [illegible] , [illegible] - [illegible] e [illegible] ad je ab k a = a e [illegible] e [illegible] k [illegible] k [illegible] d [illegible] e [illegible] , [illegible] h- [illegible] e [illegible] k [illegible] k [illegible] de [illegible] e [illegible] k [illegible] ad a a d [illegible] e ab k [illegible] .

Snížený čerpací výkon

- ! [illegible] k [illegible] ak [illegible] b e ce a [illegible] e e
- Zab k a [illegible] ak [illegible] b = [illegible] ch- [illegible] e [illegible] ak [illegible] b
- Zab k a [illegible] k a ka = a e [illegible] e [illegible] k ([illegible] c [illegible] i 300 [illegible] d [illegible] e [illegible] a- k [illegible] b) a [illegible] i [illegible] e [illegible] k a k [illegible]
- Od [illegible] ad a je ab k a = - [illegible] i [illegible] e d [illegible] ac had [illegible] k [illegible] e [illegible] a- d a a k [illegible] e [illegible] .

Svítí indikace "Drehfeld falsch" (chybné točivé pole, pouze motorový proud)

- P ad f [illegible] ch b , eb jed a f [illegible] e ch b , [illegible] ad [illegible] a , eb [illegible] d- k = [illegible] jk [illegible] e k [illegible] ig - a [illegible] e db [illegible] k b a [illegible] i e ek [illegible] ik .

Svítí kontrolka "Störung Pumpe" (porucha čerpadla, ne u compli 300)

- P ch a [illegible] ad a je k di [illegible] ici ji [illegible] , k [illegible] ad e i e [illegible] e , eb e ek [illegible] ick [illegible] e [illegible] . Te [illegible] ji [illegible] b [illegible] ede [illegible] ad a d [illegible] . dic jed [illegible] - ka [illegible] e [illegible] a [illegible] e db [illegible] k b a [illegible] i e ek [illegible] ik .

Svítí kontrolka "Hochwasser" (záplava, ne u compli 300)

- S [illegible] a d [illegible] i je i [illegible] ed [illegible] e h [illegible] eb ad [illegible] h [illegible] k [illegible] i

BEZPEČNOSTNÉ POKYNY

POZOR!

Kvalifikácia personálu

Bezpečná práca

Bezpečnostné pokyny pre prevádzkovateľa/obsluhu

Bezpečnostné pokyny pre práce v súvislosti s montážou, revíziami a údržbou

Svojvoľné prestavby a výroba náhradných dielcov

Neprípustné spôsoby použitia

Pokyny na prevenciu pred úrazmi

POUŽITIE

Z iade ia c i a e e ž a ie fek ž i i a e a a je ie aj e a k kcie LGA a h dia a a e e ž a ie d ad ch d a ie a i ž , ak aj d ž cej a k ej d b k i e a i.

N ž e b a a e a i ž - k 2 d h ľ ca a a aj d h ie 7 d .

Riade ie a e a a je, a e je ch ž e i iekaj cej de d a IP 44.

P i i a ž cii d a ed i a a d a e ia ť ť a iade ie iada k ch- a ice EMC 2014/30/EU a je h d e i ie d ž c ed a ž ja- ej ej e e ickej ie e. P i i je a ie e ie ž ci ie e h d ik a ž ja a h k a- h a f ž a je d a k eb a ed a d - e i.

P i a iade a ia d ia a ž d ž k , ed i , ak aj ie e a e ia, ak a .

- P e e ž acie iade ia a d ad d e d d e ie b d a k (a . E e EN 12050 a 12056)
- Z ia a ie k a ch iade (a . N eck VDE 0100)
- Be e a ac iedk (a . N eck Be SichV a BGR 500)
- Be e ech ick ch iade iach d ad ch d (a . N eck GUV-V C5, GUV-R 104, GUV-R 126)
- E e ick iade ia a e ž d k - iedk (a . N eck GUV-V A3)
- Och a a ed b ch EN 60079-0, EN 60079-1, EN 60079-14, EN 60079-17 a EN 1127-1

Rozsah dodávky

- ž d ° ad /- i a ž ah acia - ba e k
- ed kcia DN 150 / DN 100 e c i 500 a 1000
- e e ž bj ka e e a ie (c i 1200 e a ick je ia hadic j- k)
- j acia ba e å ede ie
- e a ick je ie hadic i jk i e å ede ie
- a acie e e ie/- a e ž - ad a eb a k DN 50
- e ť ac a i ž e ž d
- ž k a ka e å ede ie (c - i 300, 500, 1000 a 1200)
- iade ie (ie c i 300)

Prevádzkový režim:

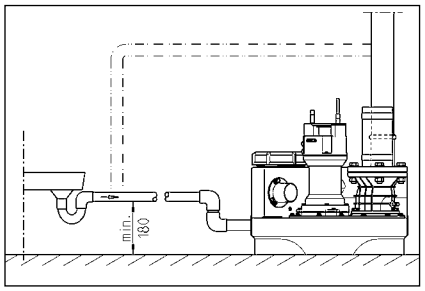

ELEKTRICKÉ PRIPOJENIE

E ek ick ž ce a° ad e, ž- ke a eb iade ie k ž- a e db e ek ikž .

P ed ka d ž c iah e ie- ž ž ž° k iade ia a abe - e e, ab i b h i i ji iade ia k a i .

POZOR! Sie ž ž° k ikd e e d d ! P ad ž ik ž da e ie k ch a k de ia .

P i je eb d ia a a - (a . EN), ed i ecifick e aji (a . VDE), ak aj ed i ie- ch e ž d k a e e ek ickej ie e.

D ia aj e e ž d k a ie (i - k)!

Z iade ia aj h adi a ie, k ° ad , e ž i e d a d , a e . e. P a ie ab d a h a h iade ia ig a i je, e d k f k ej che, aj ke je e ech d .

Ak je° ad i ah ia e, e a - ed c o a i ia. P ed d- ž e ° i ch a iah ie ž ž° ka, e e a i ak° ad ch ad a ° i e a e. P ia e h ž e ie ch a e k ° .

Zariadenia v striedavom prúde

Z iade ie a ie i ji e d ž k i - a a ej d a ed i , k ž a ach ž- d a chej ie i ad ť h de ia a je i e ž 16 A (a) i k .

Zariadenia v trojfázovom prúde

P e e ek ick i je ie e° ž acieh iade ia je eb a ž a 5- ž k CEE i a a d a ed i , k ž a ach ž d a chej ie i ad ť h de ia (3/N/PEz230/400 V).

POZOR! Ak ed ade i k e iade- ie a i e a i k a eb a a ch ak i ik C.

Montáž riadenia (nie compli 300)

Riade ie e ž d k e e ch ch ie- iach ad ť h de ia a ia aj e d a e . Riade ie b d e , ab b ked k - ek k a k . V k ž hk d ch a k de a ž da iade ie i i .

Spínacie hladiny

Za acie a acie b d d b a- a e e a d d k k - h iade ia.

P kia b e i i i k k ak e a ac b d defi a a (ie c i 300), e e b i ak ad e h d j k cha i k .

I a [illegible] e [illegible] k [illegible] e d [illegible] k U - a 40. E ek[illegible] ick [illegible] h je abe [illegible] e F1.

Z[illegible] k [illegible] e ie BRX2 a[illegible] a e a[illegible] ed e:
[illegible] e e [illegible] aj[illegible] k be BRX2
([illegible] a e e ===)
[illegible] a [illegible] e [illegible] BRX2
(b ika[illegible] ca _ _ _)

PREVÁDZKA

Skúšobná prevádzka a funkčná skúška

1. O [illegible] e° i[illegible] iaci [illegible] a [illegible] i.
2. O [illegible] e [illegible] å [illegible] k [illegible] a [illegible] å [illegible] e- de .
3. Z[illegible] iade ie [illegible] i [illegible] e a a[illegible] ie, d [illegible] e [illegible] ka a e [illegible] ed [illegible] .
4. N[illegible] a [illegible] e a a aci [illegible] h adi [illegible] .
5. [illegible] ad [illegible] a [illegible] a a e a [illegible] d i [illegible] [illegible] a ie [illegible] e ce ° i[illegible] iaci [illegible] .
6. P a [illegible] k h adi h [illegible] a ia ad ih [illegible] e [illegible] a [illegible] k [illegible] ad a ac b d, k[illegible] [illegible] a [illegible] a [illegible] iade ie.
7. [illegible] i[illegible] iaci [illegible] a [illegible] e [illegible] a e[illegible] e [illegible] .
8. Na [illegible] k ade iac[illegible] ch [illegible] ac ch c k [illegible] k [illegible] e e[illegible] [illegible] e, [illegible] a [illegible] a [illegible] b .

Automatická prevádzka

A [illegible] a ick[illegible] e [illegible] d ka je [illegible] [illegible] e- [illegible] d k [illegible] iade ia. Na [illegible] a[illegible] k [illegible] k [illegible] å [illegible] ie[illegible] d h a [illegible] a ika. [illegible] ed c [illegible] i e[illegible] a h h adi h [illegible] a ia [illegible] a ° [illegible] ad d edaj[illegible] c [illegible] a [illegible] k a a i [illegible] i a a a a. [illegible] e [illegible] d - ka° [illegible] ad a ([illegible] i c[illegible] i 300 [illegible] i[illegible] a e [illegible] a [illegible] e [illegible] d k[illegible]) je i dik a [illegible] e e [illegible] e e [illegible] di d [illegible] .

POZOR! [illegible] i [illegible] ° e e k ch [illegible] k ch [illegible] [illegible] ch (a[illegible] . [illegible] a ie ba a) je - [illegible] eb [illegible] å [illegible] k [illegible] a [illegible] i [illegible] ia , ab [illegible] e [illegible] acie [illegible] iade ie aj (a a ej [illegible] ac - a [illegible] ej [illegible] acej [illegible] e [illegible] d ke (iad [illegible] a ch d, i ak ik[illegible] ebe [illegible] e [illegible] e- [illegible] ia[illegible] [illegible] a° [illegible] ad a).

Ručná prevádzka

K [illegible] k [illegible] å [illegible] e e d h [illegible] e. [illegible] ad [illegible] a [illegible] ac je [illegible] a ej [illegible] e [illegible] d ke e [illegible] i[illegible] e d h adi d ad ej d . Od [illegible] - a ie b [illegible] e [illegible] a b [illegible] a ce ° i[illegible] iaci [illegible] .

Zastavenie

K [illegible] k [illegible] å [illegible] e e d h 0 , ° [illegible] -

Vh d ž j , a . kž e , ča d ž e a e ž a ed e a e a k. Re ž a ad 0,2 ča ed k a .

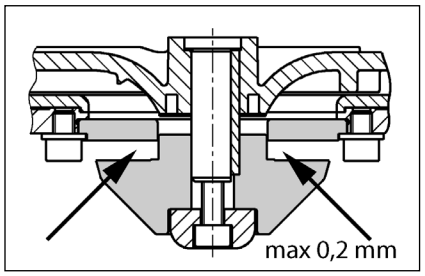

Nastavenie reznej vôle

(Pa e e° ad ž e k e).

1. Re ab k je k ž k e a ča k je ce ž ča k č e a .
2. Z e å k e a c - a ž k a ča afa e å k a e .
3. Re ab k je a ž h e e iah je ča k č e a (ah ac k e 8 N).
4. Sk je ahk ž ch d e h å - aa e a e ajbe ča k a (. 0,2).

Ak je e ž a e e ž e i ek ž ča d e ž [a ia c a ž ča ka. M ia ča ak a ž k k 1 4.

MALÁ POMOC PRI PORUCHÁCH

Zariadenie sa nerozbehne

- Sk je ie ž a ž ie, i k a d ch ž î . Ch b i k a - bl a e i ka i ak i e j - i h d a i. P i ak a č e i aj e db h e ek ik ž a eb ž d ž ka ck je i .
- Je ch b ž i je ž k e e ž e ž - i ka 2 A a ž e iadiaci a f - ž 230 230/12V, ch a a a a 230 V db je ieda h d . Ch b ž i ka ča ie ab adi e ak a h d .
- P k de ie ž d ede ie, - e f ie k a e bca
- B k a a ž k č a ie = a e ž å k e i iaci k a d - e ž b k a' ie.

Zariadenie sa nerozbehne, hlásenie poplachu

- Te ča i a d ji je ia - de ie, e , e je b k a ° je ad = a - e ž å k, ž d je ž , iah je ie ž ž ° k, d a e ad a ec° je ad a d e ž b k a - ie.

Znížený čerpací výkon

- P ž å å ede ie je ž e e
- U cha å ede ie = e ž ch je å ede ie
- U cha ž č ž k a ka = a e ž - å (i c i 300 ž d je å ede ie) a ° i je č ž k a k
- U cha a ie° je ad a = ° i je e - aci hadic° je ad - ž , a k - e .

Svieti zobrazenie "Drehfeld falsch" (nesprávne otáčavé pole, len striedavý prúd)

- Ne ž ed ie ž ch f ž a eb ch ba f ž a, e a a eb ch baj ci k ° je ad a = a a ie ž ej jk d - b e ek ik ž .

Svieti zobrazenie "Störung Pumpe (porucha čerpadla, nie compli 300)

- Na cha ° je ad a je i cha - å i ad je ž de, k ° je ad e i e ž a e a eb e ek - ick ej ch be a. Te ča č ° - e ž i č ž ab ča ° je ad je h eag a č ž ied d e ž d k . Iba e ek ik ž , e je iadiac jed - k e e a ž e å ..

Svieti zobrazenie "Hochwasser" (vysoký stav vody, nie compli 300)

- S a d ž , ije i k ed ča ° h ° je a ia a eb ad je - h k = d ž ž e ad ž cha - ia ° je ad e a eb å ede . e k.

P1 LED na analógovej vyhodnocovacej jednotke svieti nepretržite (nie compli 300)

- P e ž a cha ž a h adi = a - aj e ž ka ck je i
- V ž , i ča e ach ž d a , iad a k ž da = d ej e ch d .
- I f ž cia: K ž ka ie e ie je ch ž f kcia.

Čerpadlo „chlípe“ a nevypne sa (nie compli 300)

- V ac b d je iade ia ča ach ž d a i k =

e i e ť acie k ž a h adi ed a be ej ž , i. O a å ž a d a a ča , e ac b d a ča a i ie. Sk k å č e e iah je. D iah je acej h adi ča i d je a je a ha č P2 LED.

POZOR! P ad e ča je a a ča a i ž aj a acia h adi a (i N ča - e ie a acej h adi).

BIZTONSÁGI UTASÍTÁSOK

VIGYÁZAT!

A személyzet szakképesítése

Biztonságtudatos munkavégzés

Biztonsági utasítások az üzemeltető/kezelő számára

Biztonsági utasítások szereléshez, ellenőrzéshez és karbantartáshoz

Engedély nélküli változtatások és pótalkatrész gyártás

Nem engedélyezett üzemmódok

Balesetmegelőzési utasítások

ALKALMAZÁS

A c^a ak ža^ a k^ c i fekž iakiga e^k LGA ^ e i ig ž^i e e ^^e e de ke ek ^ aka a^ak a e ekb^ ^ i^ ž kb ^ ž a ^ e , a a i a ^ kž ^ eg eke a a hž ž^i ^ e i ek kig e ^ e.

A ž k e ž a^ ha k a i 2 H2O aga^^žgba ^ egfe jebb 7 a id^ a ig.

A e ^ g e ž a^ ha , de IP 44 ^ e i i de g e e de ke ik fe^ cc^e ^ e e .

A e ^ ž^ k ak egfe e^ e e ^ ^ e de e ^^ e^ ha^ ža e^e a e ^ egfe e a 2014/30/EU EMC i ž e de i e ^ ž^ai ak ^ aka a^ hž ž^ba e ha^ ža a a i ž ^ ž g e ž hž a c^a ha a . Eg i e i g be ^aj^ aga^fe^ ^ gi e a ^ f ž e a ^ e de ke^ i e ihž a e a ^ c^a ak a ž^ e^e e^e ege^e fe ^ a e k a ke ^ ž a i.

A be e de ^ ha^ ža a ^ ž a g e i ^ i e ^ e ek, e ^ ž^ k, a a i a he iha ž a k be e ž^a k e e ^. I e ek dž :

- Se g e^ be e de ^ek e ek ^ e kek e e ^e (. E ž ba a EN 12050 ^ a 12056 ^ ab ž k)
- Ki^fe^ ^ g be e de ^ek fe ž ž^a (. N e ^ ž gba a VDE 0100)
- Bi ^ ž g kae^ k ^ k (. N e ^ ž gba a Be SichV ^ a BGR 500)
- S e ech ikai be e de ^ek bi ^ ž ga (. N e ^ ž gba a GUV-V C5, GUV-R 104, GUV-R 126)
- E ek ^ be e de ^ek ^ g ie^ k ^ k (. N e ^ ž gba a GUV-V A3)
- R bba ž^ de g EN 60079-0, EN 60079-1, EN 60079-14, EN 60079-17 ^ EN 1127-1

A kiszállítás tartalma

- T ž ž a (ž kka) ^ ^ bi i c^a be e e he .
- Red kž e g DN 150 / DN 100 a c i 500 ^ 1000 ^ ž ž a
- Fe h ha c^ k a ^ e ^ he (a c i 1200 e^e ea^ ik^ c^a ak - k bi i c^ekke)
- C^a ak ka i a a e e khe
- Ea^ ik^ c^a ak bi i c^ekke a - e e khe
- D g ^ ^ (ek) a k i g be ž h , ag a ž bbi DN 50 be e e ^ek- he
- R g ^a ag a ž kh
- Vi^^ ac^a g e a e e khe (c i 300, 500, 1000 ^ 1200)
- Ve ^ (c i 300 e^e g)

Üzemmód: S3 ^ aka^ ^ e e, ž^d a ț ^ . ada ka

BEÉPÍTÉS

A g e be e de ^ bi ^ fe haj ž^^a ^ ^ abad ž a ke be e i. Mi de ke e- e d ^ k ba a d a ka ^ e e ^ fe e ega žbb 60 g ^ e^, i agaț - ka e e ke ^ abad hag i.

S e : A ^ e ^ e e k a e^ ke- e^ ke e e e i.

B g e e : A ž be e e ee eg ^ e - f a ke be^ e e i.

N e e k: A e e kbe a i^ - ^ ac^a g e g ^ ž bbi ^ e f - a ke e he e i. Ha a ki^ ž ^ g a a a i^^ ac^a g e , akk e e a he e eg EN ^ ab ž ^ e i i^^ af - ž^g ke be e i.

A e e ke h kba ke e e e ie a he ieg egha ž ^ i^^ a dž^i ^ i fe e .

A fe ž ž^i he e e ^ he a g ž a ^ ^ e e d fe .

FIGYELEM! Mi de c^a e a ž a - ka ^ ei ek ^ g ^ ^ gž ja a i ž i- ^a 6 N f ga a ka ^ ha ž.

A tároló összeszerelése

A b g e e be ^ f a (e k) ž ja e a ak ek e ^ e dek be , h g a ^^ e- ^ e e ^ a f j a e d e be.

compli 300. A k ž DN100 b g e e - da , ag fe ^ i^^a fe eg 102 kf ^^ e, ag ^ f ^^ e. A e^ e eke c^i^ ja e. R g ^e a e ke ^ bi i c^e a ha^ ^ ge e^ c^a e k^e- g^ g e a ž ab g e e e.

C^a e a a be e de ^ e g ^ he ha^ ž a d ke g e a ž h ajd ja a be e de ^ a g ^ ke g e e k ^ig a be e e ^ i c^ e.

Raj ja fe e ž a je ^ eke a a a g ^ g ^ eckei ^ ž ž a. F ja fe a kaka ^ he e e be a eckeke .

Raj ja fe e ž a je ^ eke a a a g ^ g ^ eckei ^ ž ž a. F ja fe a kaka ^ he e e be a eckeke .

Minden más compli esetén T ja fe a g e ^ be e de ^ a ^ ^ bi i cc^e k ^ iga ba g e e i c^ e ^ iga ^ a ki a be e de ^.

A e ibe DN 150 da ^ be e e ^ ha^ ž ak, ^ g e ^ ^ eg 152 ž ^ ^ f kf ^ ha^ ž a ž a ^^ afe a je ^ ^ i c^i^ ja e a a ^ de^ f ^ ka. Z ja e e ž a ^ a da d ba g e e a e ž ^ e (a k) ha^ ž a ž a ^ ž ^ a be ^ jb a beka c^ ž^i ^ i e .

Felhívás: A c i 500 ^ 1000 e^e a DN 150 b g e e DN 100 a c ^ kke e , ha a e ke ed kž e g e ^ ^ a ^ ^ bi i c^be ke fe ha^ ž ž a.

H a eg ^ ^ a a ^ ^ bi i c^e ha ^ ge e^ c^a e ka.

Raj ja fe a ž a a a ž ak ^ g ^ - he ^ k^ ge^ kaka ^ f ja fe a ka.

He e e be ^ ^ ^ a ž a fac^a a e e e ^ a ecekke eg a ž g e ^ f a ba.

FIGYELEM! A c^a e ka c^ak a i a ^ - ^ a h a ž, h g a ž e de f ž- dj , e e ke e^e be fe ž a e^ e, h g a ž e e^ e if g.

A c i 1200 e k^ kh e be e de ^ek e^e a ž bbi k da- ^ ke g e e ^ g e d .

A szellőző összeszerelése

R g ^e a j bb da fe a fe h ha c^ kka e de ke DN 70 ^ e e e e - ke ^ e e^^e a a fed e ž.

A c i 1200 e^e ž gja e a j bb fe ^ 78 -e^ c^ c^ k a je ^ ^ . A ž g ^ ^ ž ke e ke e eke c^i^ ja e. C^a a- k a^^a e ž a e a^ ik ^ DN 70 c^a a- k a e de ke e ^ e e e ke ^ e- e^^e ž a ka a fed e .

A nyomóvezeték összeszerelése

A ki e e ike i ž a ^ e e d :

1. Vi^^ ac^a g e (ha a ki^ ž ž^ e a- a a)
2. Le ž f a (e k)
3. C^a ak ke i a ^
4. N e e k c^a ak a ž^ a e a ^ - ik ^ c^a ak a ^ e e^^e a eg h kba a he ieg egha ž ^^ i^^ a- dž^i ^ i fe e

A DN 50 függőleges csatlakozó a vészhelyzeti elvezetéshez

E a c^a ak ž^ k i g be ž a ha^ - ž a ž h ha^ ž a d .

N i^^a fe eg kf ^^ e a c^ c^ k a je ^ ^

He e efe a 58/50-e^ d g ^ ^ ^.

A 50 k ^ ž e e de ke be e e c^ e a a ja a d g ^ ^ ž a ž ba. A ž a ž b a 50 ke eg e .

R g ^e a k i g be ž h ž h ž f - he e a fa a, k ^^e ^^ e a be c^ e, ajd c^a ak a a^^a a k i g be ž a e e e k. A e e ke i i^ h- kba ke e e e ia he ieg egha ž ^^ i^^ a dž^i ^ i fe e .

A DN 50 vízszintes kiegészítő bemenet

A ž bbi b g e e he a e e e k ^ e c^a a i^^a fe eg kk f ^^ e. A ke e ke e eke c^i^ ja e.

He e efe a 58/50-e^ d g ^ ^ ^

A 50 k ^ ž e e de ke be e e c^ e a a ja a d g ^ ^ ž a ž ba.

FIGYELEM! A c i 300 a ^ da ^ be e e ei c^a ak a e e keke a

bp e de ˆ k e be eg . a ˆ e ke e ž i. E a ega ž bb 180 aga ˆ ˆ ž gga ke e de ke e a c ˆ a a a a ˆ a fe ž ž ˆ i fe e k . A c ˆ a ak a e e k g ˆ e ž a b ž k ad dha ak a k i e e , ˆ d ž ˆ ke e ke he . E e d ž ˆ e kp ˆ e dek be a be e e e e ke a aga ˆ j ž ž g e e e i ke . A ˆ e e e k c ˆ a ak a ha a ž e ˆ he .

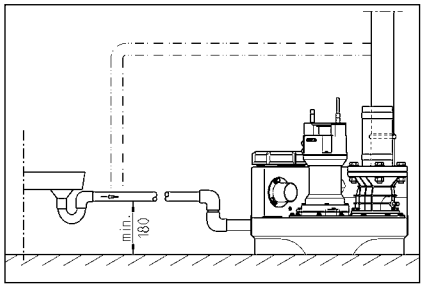

ELEKTROMOS CSATLAKOZTATÁS

A ž , a k ek , ag a e ki ž ag e ek ech ikai ˆ ak bp ge he k ž a ka .

Mi de ţ k ž a k egke d ˆ e e h a ki a bp e de ˆ c ˆ a ak j ž a h ž a b ˆ bi ˆ a, h g a ž ˆ ˆ ek ž a he e he fe ˆ g a ž.

FIGYELEM! A h ž a i c ˆ a ak ˆ ha e he e e be! A e ˆ e ege ˆ e be ž a a kh ˆ k ž kh e e he .

A i de k e ˆ ž ka (. EN), a ˆ ž g ˆ ecifik ˆ e ž ˆ ka (. VDE), a a i a he i e ž h ž a e e j ek e ž ˆ ai be ke a i.

g e je a i fe ˆ g be ž ˆ ž a (ž ˆ d a ˆ ž b ž)!

A bp e de ˆ ek ˆ i ka c ˆ a e de ke ek e ek a ž a ž ž ˆ f gg e be-, i . eka c ˆ j ž k. A be ia ˆ ˆ ž ˆ ˆ a je i, ha a ţ k d ˆ be a e fe . Akk i ˆ, ha a c ˆ ak ž e e i.

Ha a a ˆ ž g ˆ a fe he , a ek c ˆ e ˆ ˆ ž eka c ˆ ja a . A a k ž ak e h ž ž ˆ a e h a ki a h ž a i c ˆ a ak i e a a a eţ ˆ ž a a ik ˆ a beka c ˆ . K e e a je ˆ e d ˆ ad.

Berendezések váltóárammal

A bp e de ˆ c ˆ ak e ž ˆ ˆ i e e e k ek h c ˆ a ak a ha ja e ek ˆ ž a , a i ˆ ˆ a d ž ˆ i ˆ i fe e a ž ha ak, ˆ 16 A (ehe e e ˆ gge) bi ˆ ˆ ak.

Berendezések váltakozó árammal

A e bp e de ˆ e ek ˆ c ˆ a ak a ž ˆ ž h e ž ˆ ˆ i e e e 5- ˆ CEE k ek ha ˆ ž ha e ek ˆ ž a-

, a i ˆ ˆ a d ž ˆ i ˆ i fe e a ž ha ak (3/N/PEz230/400V).

FIGYELEM! A bp e de ˆ e bi ˆ ž ˆ ž a ehe e e ˆ g bi ˆ ˆ k k, ag C-kp ak-

Belső riasztójelző leállítása

C i 300 e e . H a e a ec e e j (BRX/BRX1). H g a c a ak - e e e , he e e fe a j eg k ka c eg ik ka c a.

Külső riasztójelző (tartozék)

N i a fe a e egfig e e e aj- aj.

A "S+" "S-" ka c a bbi k 12 VDC je ad c a ak a ha i 30 A fe e e . A be ia je ig i ka c ha ja ki, ag be.

A c i 300 e e kk fe e - he eg h a f gge e ia . A fe e- e i a a eg a ha a .

Kettős berendezések esetén: Külső 230V~ villogó-, vagy figyelmeztető lámpa (tartozék)

C a ak a k a 230Vz (.1A) a N 41 ka c a.

He e e e i hida a Uz ka c a 40-e ka c a. A k a F1 bi ja.

A BRX2 c a ak h d ak a a bbiak e- i ke be a i:
Vi g a k BRX2 (F a ===)
Fig e e a BRX2
(Vi g a _ _ _).

ÜZEM

Próbamenet és a működés ellenőrzése

1. N i a fe a fede e.
2. N i a fe a be e e i- e e k- f a.
3. He e e a be e de fe g a , g e je a f g i e i ak kije - e.
4. T e fe a a beka c i i ig.
5. A a ekk beka c i a - . K e e fig e e a a e e- a i a e.
6. A i ka c j e je k e a a beka c i f , a ia ki d ig.
7. Z ja e i a i a fed e a e .
8. A ka c bb i i e e e - i e a , a a k a c e- e kek ige e .

Automatikus üzem

A be e de a e a a . Ehhe a ka c g b a a ik he e be ke a ia. A i e i ka - c a a a a ba f a- d k i ek egfe e e ka c be ki. A a (c i 300 i k e e) a d i g di da je i.

FIGYELEM! K ege e ag bef i e i gek e (. ede c k e- e ek) a be e i f a addig ke f ja i, h g a e e ke e b a i ka c i be t k dj (e f a e be , k be a a- he he).

Kézi üzem

Ka c ja a ka c g b k i a ba. A a ekk a e i f gge e-

A be [illegible] e i [illegible] g 380 [illegible] [illegible]la UC 08/2 M [illegible] 25/2 M M [illegible] iC [illegible] [illegible]k e [illegible] [illegible] 1000 [illegible] [illegible]la 25/2 BW [illegible] 35/2 BW M [illegible] F ee [illegible] [illegible]k e [illegible] .

A ajk [illegible] [illegible] c [illegible]ak a [illegible] egad [illegible] a [illegible] e i- [illegible] gge [illegible] he i fe . A ajk [illegible] a [illegible] [illegible] [illegible] e a [illegible] a [illegible] [illegible] e e [illegible] e [illegible] k ha [illegible]ja.

A vágórés ellenőrzése

(C [illegible]ak [illegible]g k [illegible] eke [illegible] [illegible]k e [illegible] [illegible] - e [illegible]). E e [illegible] i e a [illegible] a f g a a [illegible]ak c [illegible]a [illegible] ja [illegible], a [illegible] i [illegible] a [illegible] e e [illegible] [illegible] he ha [illegible] [illegible] [illegible] ek [illegible] [illegible] g [illegible] c [illegible]a [illegible] k [illegible] [illegible] [illegible]g [illegible]. S k [illegible] g e [illegible] [illegible] [illegible] [illegible] a c [illegible]a [illegible] ka [illegible].

Ha c [illegible] kke a [illegible] [illegible] i [illegible] e je [illegible] [illegible] , [illegible] ek- [illegible] ik a [illegible] i ajkib c [illegible] [illegible], ag c [illegible] kke a [illegible]g [illegible] [illegible] e je [illegible] [illegible] e (a [illegible] a b kk a a), eg [illegible] ak [illegible] e e [illegible] i e a f [illegible] g k [illegible] k [illegible] a [illegible]g eg [illegible] g k [illegible] [illegible]. S k [illegible] g e [illegible] c [illegible] - je e eke [illegible] a a ka [illegible] [illegible] eke [illegible].

Eg a ka [illegible] a [illegible] [illegible] [illegible] a , . eg h ag- [illegible] [illegible] eg [illegible] g e [illegible] [illegible] he [illegible] a [illegible]g [illegible] [illegible] [illegible]g [illegible] e k [illegible] [illegible] i [illegible]g [illegible] [illegible]. A 0,2 [illegible] - ag bb [illegible]g [illegible] [illegible] c [illegible] kke [illegible] e i ke .

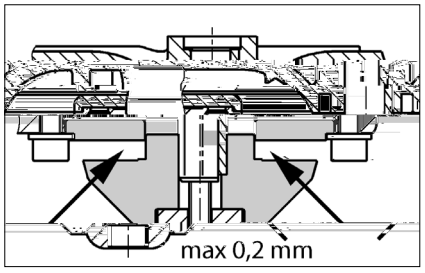

A vágórés beállítása

(C [illegible]ak [illegible]g k [illegible] eke [illegible] [illegible] [illegible]k a [illegible] a [illegible] k ik).

1. B kk ja a [illegible]g [illegible] [illegible] eg fad [illegible] abba [illegible] f [illegible] ga [illegible] a ki a k [illegible] [illegible] i ha [illegible] [illegible] g [illegible] e [illegible] [illegible] b [illegible] - c [illegible]a [illegible] [illegible].

2. Veg e e a [illegible] e [illegible] e [illegible], a [illegible]g [illegible] [illegible], [illegible] eg i e [illegible] [illegible] e [illegible] ajd he e e fe i [illegible] [illegible] a [illegible] e [illegible] e [illegible] [illegible] a [illegible]g [illegible] [illegible].

3. B kk ja a [illegible]g [illegible] [illegible] [illegible] [illegible] [illegible] [illegible] a [illegible] a ha [illegible] [illegible] g [illegible] e [illegible] i [illegible] b [illegible] c [illegible]a [illegible] a (R [illegible] f [illegible] d [illegible] i - [illegible] [illegible] k 8N [illegible]).

4. E e [illegible] i e a [illegible]g [illegible] [illegible] akad [illegible] a a [illegible] e- [illegible] [illegible] [illegible] je e i [illegible] [illegible] a [illegible] [illegible] [illegible] [illegible] [illegible] . 0,2 [illegible]).

Ha a [illegible]g [illegible] [illegible] [illegible] g [illegible] i dig [illegible] ag [illegible] g eg i e [illegible] [illegible] e [illegible] e ke [illegible] [illegible] a ia. A 1-4 [illegible] kba [illegible] [illegible] [illegible] eke [illegible] ekk [illegible] eg ke i [illegible] [illegible] e ie.

KIS SEGÍTSÉG HIBÁK ESETÉRE

A berendezés nem működik

- E e [illegible] i e a h [illegible] [illegible] i fe [illegible] [illegible] [illegible] ge [illegible], a bi - [illegible] [illegible] k [illegible] [illegible] a FI de [illegible] i ka c [illegible] [illegible]. A [illegible] eghib [illegible] d [illegible] bi [illegible] [illegible] k ka [illegible] c [illegible]ak a - [illegible] [illegible] ege [illegible] [illegible] kekke [illegible] e de ke [illegible] bi - [illegible] [illegible] kka c [illegible] je ki. I [illegible] [illegible] e [illegible] ki d [illegible] e [illegible] h j e ek [illegible] [illegible] ech ikai [illegible] ak [illegible] - bb [illegible], ag h ja fe a [illegible] ech ikai e [illegible] [illegible] - g [illegible] [illegible].
- A 230/12V- [illegible] e [illegible] [illegible] af h a be [illegible] 2 A [illegible] ehe [illegible] e [illegible] [illegible] egc [illegible] e [illegible] bi [illegible] [illegible] k, a [illegible] de [illegible] [illegible] a 230V [illegible] [illegible] [illegible] [illegible] ki e- [illegible] eghib [illegible] d [illegible]. A hib [illegible] bi [illegible] [illegible] k [illegible] c [illegible]ak a [illegible] [illegible] a c [illegible] he i, [illegible] e a [illegible] [illegible] kekke [illegible] e de ke ik.
- A h [illegible] [illegible] i b [illegible] e e [illegible] eghib [illegible] d [illegible]. A c [illegible]e- [illegible] c [illegible]ak a g [illegible] [illegible] ge he i.
- A [illegible] [illegible] ka c [illegible] ja b kk a = Z [illegible] ja e a b [illegible] e e i f [illegible] [illegible], i [illegible] a fe a [illegible] fe- d [illegible] [illegible] h [illegible] [illegible] a e a b kk [illegible] k [illegible].

A berendezés nem működik, riasztójelzés

- A [illegible] [illegible] ek [illegible] c be [illegible] [illegible] [illegible] [illegible] eka - c [illegible] [illegible] a [illegible] a b kk a a = Z [illegible] ja e a b [illegible] e e i f [illegible] [illegible], [illegible] [illegible] e a [illegible] [illegible], h [illegible] a ki a h [illegible] [illegible] i c [illegible] ak [illegible], [illegible] e je e a [illegible] afe [illegible] [illegible] [illegible] h [illegible] [illegible] a e a b kk [illegible] [illegible] k [illegible].

Csökken a szállítási teljesítmény

- A [illegible] e e [illegible] kbe [illegible] f [illegible] i c [illegible] e - je [illegible] e [illegible] a
- A [illegible] e e [illegible] k e d [illegible] = M [illegible] a [illegible] a [illegible] e e [illegible] ke [illegible]
- A i [illegible] ac [illegible]a [illegible] e e d [illegible] = Z [illegible] ja e a f [illegible] [illegible] (a c [illegible] i 300 e [illegible] [illegible] [illegible] e ki a [illegible] e e [illegible] ke [illegible]) [illegible] i [illegible] [illegible] a a i [illegible] ac [illegible]a- [illegible] e [illegible].
- A [illegible] a [illegible] e [illegible] [illegible] e e d [illegible] = Ti [illegible] [illegible] a a [illegible] a [illegible] [illegible] j [illegible] ak [illegible] e [illegible] [illegible] c [illegible] [illegible] [illegible] e - e [illegible] i e a f [illegible] a [illegible] ka [illegible]

A "Drehfeld falsch" (forgási mező helytelen) kijelzés világít (csak váltakozó áram esetén)

- A h [illegible] [illegible] i f [illegible] i [illegible] k [illegible] e di [illegible] ge he [illegible] e e , ag hi [illegible] ik a eg ik f [illegible] i [illegible], e [illegible] [illegible] a [illegible] - a [illegible] [illegible] [illegible] e je [illegible] [illegible] e a ac [illegible] , ag hi [illegible] ik = A h [illegible] [illegible] i c [illegible] ak [illegible] e e [illegible] - [illegible] e ki [illegible] ag e ek [illegible] [illegible] ech ikai [illegible] ak [illegible] - bb [illegible] [illegible] a .

A "Störung Pumpe" (pumpa zavar) kijelző világít (compli 300 esetén nem)

- A [illegible] a de [illegible] e [illegible] dek be eg [illegible] [illegible] a - [illegible] [illegible] he [illegible] i d [illegible] ka c [illegible] [illegible] fe [illegible] e- [illegible] e [illegible] e a [illegible] [illegible] he [illegible], ag e ek [illegible] e [illegible] [illegible] hiba e [illegible] eka c [illegible] ja a [illegible] [illegible]. A [illegible] a ki d [illegible] [illegible] i i [illegible] [illegible] e [illegible] behe- e [illegible] he a [illegible] k i eg ke i [illegible] a [illegible] a i. B [illegible] e de [illegible]ek a e [illegible] [illegible] e ek [illegible] [illegible] ech ikai [illegible] ak [illegible] b [illegible] [illegible] ha [illegible]ja fe a d [illegible] ka c [illegible] i [illegible] a [illegible] [illegible] g [illegible] bj [illegible] ak.

A "Hochwasser" (túlfolyás) kijelzés világít (compli 300 esetén nem)

- A [illegible] ba [illegible] [illegible] i [illegible] c [illegible]ek [illegible] [illegible] a - [illegible] a [illegible] [illegible], ag [illegible] [illegible] bef [illegible] [illegible] ia [illegible] [illegible] [illegible] a- ga [illegible] = S [illegible] [illegible] e [illegible] [illegible] e eg [illegible] [illegible] ba , ag a [illegible] e e [illegible] kbe [illegible] e [illegible] e ege [illegible] d [illegible] [illegible] [illegible] - [illegible] ka [illegible], i . a [illegible] [illegible] bef a [illegible] [illegible].

Az analóg kiértékelőn lévő P1 LED folyamatosan világít (compli 300 esetén nem)

- A [illegible] i [illegible] ke [illegible] [illegible] [illegible] hiba e [illegible] fe = H ja fe a e [illegible] [illegible] g [illegible] a [illegible]
- Ni c [illegible] [illegible] ad k a [illegible] ba = T [illegible] [illegible] be eg ki [illegible] i e [illegible].
- Fe h [illegible] : R [illegible] id fe i a [illegible] [illegible] a [illegible] e e- [illegible] e [illegible] [illegible] [illegible] [illegible] [illegible] t [illegible] k [illegible] d [illegible] i hib [illegible] ak.

A pumpa „szürcsöl" és nem kapcsol le (compli 300 esetén nem)

- A b [illegible] e de [illegible] kika c [illegible] [illegible] i [illegible] ja [illegible] a a- c [illegible] a a be [illegible] [illegible] a =

O dja ki e [illegible] a [illegible] i [illegible] ke [illegible] h [illegible] [illegible] [illegible] [illegible] g [illegible] - c [illegible]a [illegible] j [illegible]. J b [illegible] a [illegible] [illegible] [illegible] a [illegible] [illegible] f [illegible] d [illegible] [illegible] a a kika c [illegible] [illegible] i [illegible] [illegible] aga [illegible]ab [illegible] a [illegible] ha [illegible] . E [illegible] h [illegible] a i [illegible] [illegible] fe [illegible] e a c [illegible]a [illegible] ka [illegible]. A kika c [illegible] [illegible] i [illegible] e [illegible] [illegible] [illegible] ki [illegible] [illegible] [illegible] [illegible] P2 LED kia [illegible] [illegible] a je i.

FIGYELEM! I e k [illegible] e [illegible] eg i [illegible] [illegible] e be ke [illegible] [illegible] a ia a beka c [illegible] [illegible] i [illegible] [illegible] i [illegible]. ([illegible] d a beka c [illegible] [illegible] i [illegible] i [illegible] [illegible] e [illegible] be [illegible] [illegible] [illegible] a- [illegible] [illegible]).

INSTRUCȚIUNI DE SIGURANȚĂ

ATENȚIE!

Calificarea personalului

Lucrări orientate pe siguranță

Instrucțiuni de siguranță pentru operator/utilizator

Instrucțiuni de siguranță pentru lucrări de montaj, inspecție și întreținere

Reconstruirea arbitrară și producția de piese de schimb

Moduri de funcționare nepermise

Indicații pentru prevenirea accidentelor

UTILIZARE

Sțații e de ea a e așe c așii fe-ca e fi abi e c i de i c c-i LGA i adec așe e ea a e așe di a eșe i i e, ec i a a e e aj e c i i e af e e.

Re e e eșa e c i e a. a c a ei de a de 2 i d a de ce 7 i e.

Si de c a d e e eșa , e e eja i a ii c a c f IP 44.

ca i a ii eg e e i ii ii c e e, i de c a d - de i e e i e e de eç ie a e ecși-ei EMC 2014/30/EU i e e adec aș e i i ea a ca ic a eșea a b ic de a e e c e gie e ec ic . ca ac d ii a e ea i d ia a ei c - a ii i d ia e c a e e c e gie e ec ic de a i a f a de a e i e, eb ie   e ia ca c a i e c a e e i e a a i fe- e e.

ca ii iii a ații , eb ie ec-așe egi e, e i ii e ec i e a i a e, ec i e ed i e ca e, ca de e.

- ații de e a a e așe e e ea c i i e i (de e. E a EN 12050 i 12056)
- M ea i a ații de j a e i e (de e. G a ia VDE 0100)
- Sig a a i ij ace de (de e. G a ia Be SichV i BGR 500)
- Sig a a i a ații e eh ice e a e așe (de e. G a ia GUV-V C5, GUV-R 104, GUV-R 126)
- I a ații e ec ice i c abi e (de e. G a ia GUV-V A3)
- P eç ia i a e iei EN 60079-0, EN 60079-1, EN 60079-14, EN 60079-17 i EN 1127-1

Setul de livrare

- Re e c (e) i f a de fi e e ad i ie
- Pie de ed ç ie DN 150 / DN 100 e c i 500 i 1000
- M f ib e e i e bi i e a ice c i 1200 c c e)
- F a de ac d e e c d ca de e i e
- bi e e a ic c c e e c - d ca de e i e
- G i i de i d e e a a c b a a a ad i ie DN 50
- Ma ia de fi e e e
- C a e de e i e e c d ca de e i e (c i 300, 500, 1000 i 1200)
- Si de c a d (c i 300)

Mod de funcționare: F ç i e i i- e S3, e i Da e eh .

MONTAREA

Sțația de e eb ie a d ig i i d idic ea i abi . L g i af a ie e e eb ie ii așe i - e i eb ie e i e ai de de ce i 60 c   e e ec i   e.

Ve i e: C d ca de e i e eb ie de-a a e e ac i .

Ad i ie: ad i ia di fa e i e- b ie a e a a e a a d .

C d c de e i e: a e e c a e ei de e i e c d ca de e i e eb ie a e- a a a e a d . ca e c a e a de e i e e e i c e de ea i a a iei, eb ie a aici di i de ig a c a c g ii e i e e a EN.

C d ca de e i e eb ie de a a c b c e e a ca de e i ei .

Pe e ea a i i de a b e e- b ie e   a ei.

ATENȚIE! T așe b i e, e e c a fi ea ie e i di id a e di e , a ie fie e c e . de g e de 6 N .

Montajul rezervorului

chideți a a di ad i ie (acce i), e - a iedica i ea a ei - aj i.

compli 300. De chide i ad i ia d DN 100, a a a de c f   c ad de ece 102 a f   eca ic i deba a i. Fi a i f a a af e de fi e d e a ad i ie c aj b i he ag a e.

ba i c e a c ea i a a i-ei a e   ia i i ge i i a a ia c f a a de fi e, a i e e ea a de ad i ie.

De e a i a caje e e dib i e de ig i i, a ii d ce i dib i e.

Ac , f a a de fi e a e fi ii - a a ia a e fi a a a c aj b i e i aibe .

Toate celelalte compli i ge i a ia de e c f a a de fi e e ea a de ad- i ie a i i a i ia i.

Dac eb ie ii a ad i ie DN 150, a ci acea a eb ie ai i de chi a caj c f   c ad de ece 152 i deba a . Ad i ia a d d eb ie chi a i c e de chid e (acce i) i i e de   eb ie abi i di .

Indicație: La c i 500 i 1000, ad i ia a e fi ed de a DN 150 a DN 100, dac ie a af e de ed ç ie e e a e a ai i f a a de fi e.

S ge i f b i e he ag a e a e f a ei de fi e.

De e a i i e ec a i ificii e e fi ea de a e   i.

I d ce i b e e e c aiba i dib i a e aj e   i b a i f .

ATENȚIE! S ge i b i e d f , a fe c e   e def e e, ca c e i ic ei ee a - ei i.

La i a a ii e iei de c   ç ie c i 1200, e   e fi ea   i e c c d c i a a e.

Montajul ventilării

Rac da i c d ca de e i e c fa i- b DN 70 d ea a   a e   i ece i- e e ac i .

La c i 1200, ia i d e   i 78 a caj i deba a i. Rac da i ac c d ca de e i e c bi ea e a ic DN 70 i ece i- e e ac i .

Montajul conductei de presiune

M ea e f a a de e ac e:

1. C a e de e i e (dac e e i c e de e)
2. Ve i de chid e (acce i)
3. F a d ac d e i
4. ac da i c d ca de e i e c bi- e e a ic i de a a i- c b c e e a ca de e i ei .

Racord DN 50 vertical pentru evacuarea de urgență a apelor uzate

Ace ac d e e ii a e ac d ea ei a a e c b a .

De chide i a caj c   f   c ad de ece i deba a i- .

I d ce i g i a de i d e 58/50.

i ge i ea a de ad i ie - c dia e - i 50 - i g i a de i d e e . Di a a fa de f d e - i eb ie   e 50 .

Fi a i a a a c b a a e- e e, a fe c fie bi e acce ibi , c - ec a i- c ea a i d ia ac da i c d ca de e i e a ei a a e c b a . Ți aici, c d ca de e i e e- b ie de a a c b c e e a ca de e i ei .

Admisie suplimentară DN 50 orizontală

De chide i ca e a efab ica e ad- i ia i e   c f e c i deba a i.

I d ce i g i a de i d e 58/50.

i ge i ea a de ad i ie - c dia e - i 50 - i g i a de i d e e .

ATENȚIE! C d c e e d ac d e de a ad- i ii e j a e a a e a e c i 300 eb ie e e ec ibi a a e de i a a ie c a a i c de ac e. Ace c eb ie aib ce i   e de 180 e ea i f i   a e ii i a de i a e. Da i b e de a di c d c-

ad ac de e, e ae aj ge a b e de e ac e i a e i e i e . Pe a e aceaž e i e i e , c d ad ie eb ie a ie ž c ž a- . C d ade e ie e ef ac daž a e ie e e i.

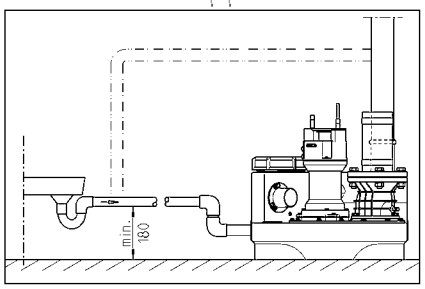

CONEXIUNE ELECTRICĂ

N ai e a eec ic e ie ž e ec e ie e ice a ž, ec ca a ž de c a dž.

ai e de fiec e e, c ae i ec ž i ae iei di ž, a fe c i ae ia ž ai ž fi ž di ž b e i e de a e e a e.

ATENȚIE! N i eb d ce i ici daž ec ž ai ž! A ac e ž de e e a a e a ae ca a defec i i da e.

N e a abie (de e . EN), e e i ie e cifice ii (de e . VDE), ec i e- e i ie e ae i ca ia e ei de a i- e e eb ie e ec ae.

Re ec ae i e i ea de f ci e e (ei ž c a de fab ica ie)!

I ae ii ede i c e de ie, ce e e- e e e ec i e e a, f cie de ie a ei. A e ie ea ž ai ž ae ii de a ž i eg e a ž ai ea ž c e i defec i ef ci a ž, chia ia c c d acea a e e e ž e.

Dac a a -a c i ea e ic, acea a e e dec ec až de e a c f e e. ai e de e edi ea ca ei defec i ii, ec ž e eb ie c di i- ž, de e ece a e e e ea a a ii. N e e c e aj di ec de di f ci a ia e.

Instalații în curentul alternativ

E e e i ž ac de ea i ae ii a ai a i ž i ae ž a de eg a e e, ce e e af ž e - ae ca dea a ei de e i e i e ž ie e a igaž c 16 A (e ž).

Instalații în curent trifazat

Pe c e i ea ee ic a ae ii de e, eb ie e ž ž i ž CEE 5 i, i ae ž a de eg a e e, ce e e af ž e - ae ca dea a ei de e i e i e ž (3/N/PE 230/400 V).

ATENȚIE! Ca igaj e ei i e e e i ae ie, eb ie ii a e ai igaj e e e a igaj e a e c ce ac ie i- ica C.

Montarea sistemului de comandă (în afară de compli 300)

E a ai ie a de c a dž ai a ii ca e dea a ei de e e i e i e ž e i e i ca ca a e chiž. Si a de c a dž eb ie ž fie bi e acce ibi, e afi ibi ic d c e . U idi ea a ž ic de a e di ge ie a de c a dž.

Nivele de conectare

P ce ede e ie i e ie a e ae di fab ic e e ž i ea a da d ead ie ai a a ie e ec ie.

Dač eb ie ž e ec ai a ž ž i e de ad ie, a ci eb ie ž edefi ii c de e ie (afaž de c i 300), de e ece ca c e e ae a ge a e ei- e ž ad ie.

Ce ea e ce dec ec e e e ap ž (+2) ii a ii ed be e ci ž de f (+ 4) e e ea e l da a , c- e ž de c e ie a de c a dž.

Restabilirea nivelului de pornire (în afară de compli 300)

O i ie e ie a ia, e ai c a- a Ma a -0-A a e 0. Reg ea c ide e ie e ea ea ž d- E a a a gic K1 ea a a e a ie a de c a dž. de a ai a e a ca ac a e e a d i.

Pe ea a a gic e g e c ei di de i a e, ce e de P1 - P2 - P3.
- P1 = F cie de diag ž
- P2 i ea ž = ie a ei e af ž e- e i e de dec ec e, ž c ž b ie dec ec e
- P3 i ea ž = ie a ei a i e- de c ec e

U e ie e de c ec e ec a ž, ž a gi ea fe i e ž a ad ie ei. T eb ie ž i e e ai P2, dac i ea ž i P3, eb ie ž e efec e e eg a .

R ž c i ic eb de eg e de e b P1 c a ž ad a ii e ace de cea ic. Sc f da ia f e- e de ie i ž a- ž - e ž c de cea ic. Dac P3 ai i ea ž c, ž c i eb de eg e c ai e ca ie a i, e c e ace de cea ic, ž c d P3 i ea ž di P c de ie ee e e a .

Instalație de alarmă

Me aje e de defec i i e ea ea ž a ž ic, c iac ic. I a ia de a ž de- e de ž de e ea e ie a ž di f c- i ai ž ie i ei (LED- afaž de AD 00 ic i 300). Si a e a de a ž ac ic i eg a ž. Sp a ac ic e a e ie a edi ea di f ci ai ž ii a ge e a .

Dac c de aj e c ac ic a' e aj i dé di f ci ai a e, a ci a de a ž e e a f i i de e e i c ac ibe e ia (b e 40 i 41) e a ž (c i 300 e- c). C ac e a de chi a di f ci- ai ž ii c e e a e ca c a . 5A / 250V AC. C ac e de chide d ž e edi ea di f ci ai ž ii.

Acumulator pentru instalația de alarmă (în afară de compli 300)

Di i de a ž e e de e de e- ea e ie - ia e, ca ei e e de c e , a e fi dec a ž a ž de a ž e. Pe a e ie f ci ai ž i a ia de a ž i ca ei e e de c e , eb ie ii a ac a . De- chide i a a 4 e ž. Rac da ia ac a ac a ade ac de ifi ai e' a- i ž a c e ž c aj c ie ide cab e i e . Ace a a e ai e a i a- ai a de a ž c e ie gie ec ic, ca ei a e c i e j de cca. 1 ž.

D ž e ei ea e i ii de e ea, ac a- a e ce di a da a. U ac a a de c ca e e eg ž f c- i e cca. 24 e, c ce ea c e ž e b ied ž cca. 100 e.

Ve ifica i d eg a f ci ai ea ac a a i! Pe a ceaa, dec ec ai e i ea de e ea ideca a ie ae de a ž e. S a a ei ac ice e- eb ie ž e ed c ifica i i de ai e i e. D a ade ia ž e e de cca. 5 a i. N ai da ade ii e ac a i c hi ba- e e i d ž 5 a i.

U i i a ai ac a 9V! ca ii ii ba e li c ca e e i ž ic de e ie!

Contorul orelor de funcționare

O i a, c a e e f ci ie a e fi i a i e de a ž (afaž de c i 300). Pe a ceaa, c a- ai c ei ec ii e e f ci- ie e a cca. 8 ii d ce i- e e ai ž c BSZ ce e 4 fe. ca ce d ž e e ai ai e ai affaj, c e e f ci ie eb e ž ž i a 180 .

Oprirea buzerului intern

afaž de c i 300. Sc e ij ie i- ia (BRX/BRX1). Pe a e ie de e- c ei e d ce i ij ie e if de e e ge ž c 2 b e.

Buzer extern (accesoriu)

De[illegible]

La b[illegible] "S+" i "S-" [illegible]

La c[illegible]

La instalațiile duble: Bliț sau lumină de avertizare extern(ă) de 230 V~ (accesoriu)

C[illegible]

A[illegible]

Reg[illegible] BRX2, a[illegible]:
B[illegible]
L[illegible]

FUNCȚIONAREA

Funcționare de probă și verificarea funcționării

1. De[illegible]
2. De[illegible]
3. P[illegible]
4. U[illegible]
5. P[illegible]
6. Ridicați fișa cablului de rețea, pentru a deconecta alimentarea.
7. [illegible]
8. Pentru a reciclarea corectă, informațiile referitoare la eliminarea corectă a deșeurilor, vă rugăm să vizitați site-ul nostru.

Mod automat

M[illegible]

ATENȚIE! [illegible]

Mod manual

Ad[illegible]

Oprirea

Ad[illegible]

Pentru a evita deteriorarea motorului, nu treceți direct de la poziția "0", înainte de a aștepta câteva secunde.

Inspecția

Pentru a asigura funcționarea corectă, trebuie să efectuați verificări periodice.

ÎNTREȚINEREA

V[illegible] EN 12056-4.

Pentru a garanta siguranța și funcționarea corectă a unității, vă recomandăm cheltuirea cu atenție de către un tehnician calificat, de 6 ori pe an, de 12 ori pe an.

Înainte de efectuarea oricărei operațiuni de întreținere, deconectați alimentarea electrică a unității.

Verificați dacă există (și) și îndepărtați orice depuneri de pe acestea.

Verificați dacă există (și) și îndepărtați orice depuneri de pe acestea. Dacă este cazul, înlocuiți-le.

Dacă este cazul, înlocuiți-le, apelând la un tehnician calificat. Pentru a evita orice pericol, chiar înainte de a efectua operațiunile descrise în "DKG" cu cele din "DKG".

Înainte de efectuarea operațiunilor de întreținere, verificați:

1. Verificați alimentarea electrică de rețea și conectarea la împământare a unității.
2. Acționați manual supapa de siguranță pentru a verifica dacă este curată.
3. Deschideți ușa de acces a unității și verificați starea generală a unității; Curățați cu atenție (cu aer).
4. Curățați cu atenție de impurități; Verificați starea generală a unității.

Repetați operațiunile descrise în capitolul.

5. Curățați cu atenție de impurități (dacă este cazul).
6. Curățați cu atenție de impurități (dacă este cazul).
7. Verificați starea generală a unității.
8. Strângeți cu atenție toate fișele de 2 ori.
9. Verificați starea generală a unității. Sistemul de acționare trebuie să funcționeze fără probleme, fără zgomote sau vibrații. Pentru a verifica dacă este corect.

Dacă este cazul, înlocuiți-le.

Controlul uleiului

(Vă rugăm să consultați 08/2, 25/2 și 35/2) Cantitatea, [illegible] de 300 de ore de funcționare, de 1000 de ore de funcționare. [illegible] dacă este cazul.

Dacă este [illegible] de 1000 de ore de funcționare, [illegible] dacă este cazul.

Dacă este [illegible] de 300 de ore de funcționare, [illegible] dacă este cazul.

Înlocuirea uleiului

(Vă rugăm să consultați 08/2, 25/2 și 35/2) Pentru a asigura funcționarea corectă, [illegible] de 300 de ore de funcționare [illegible] de 1000 de ore de funcționare. [illegible] dacă este cazul.

Pentru [illegible] HLP a cărei [illegible] 22 - 46, de [illegible]. M[illegible] DTE 22, DTE 24, DTE 25.

Ca ¸i¸a¸ea de ¸ ¸ e¸ ž ´ ¸ ž 380 ¸ ¸ a ¸ e e M¸¸iC¸ UC 08/2 M i 25/2 M i 1000 ¸ ¸ a ¸ e e M¸¸iF ee 25/2 BW i 35/2 BW.

Ca ¸ a de ¸ ei¸ e ie ´ž fie ¸ ¸ž ¸ ai c¸ ca ¸i¸a¸ea de ¸ ei¸ e¸ i ¸a¸ž. O ´ ¸ a- ¸ ¸ e d¸ce a di´ ¸ g¸ ea ¸ ei.

Controlul fantei

(Va abi ¸ ai e ¸ ¸ ¸ e c¸ ¸ cž¸). T¸ ¸ b¸ i e ca ´ei ¸ ei, ¸ ec¸ i ¸- ¸ b¸ i e de egž¸ ¸ž i de fi¸ e a i ´¸ a ¸ iei ¸ eb¸ie c ¸ a¸e dacž ´ ¸ fi¸ a¸e ¸ ie i, a e ie,¸ eb¸ie ´ ´ e.

ca ¸ ¸ ei ¸ ¸ ed ´e de¸ a ´ ¸, g - ¸ ¸ ai ¸ ¸ ice f¸ ¸ i ¸ e ´a¸ a ¸ ei ¸ ¸ i de¸ž¸ ¸ e ´cž d¸ e (¸ e di¸ a de b - c¸ e a ¸ ei) ¸ ¸ ¸ ¸ eca i´ ¸ de¸ž - ¸ e¸ eb¸ie c ¸ a¸e de ¸ ´ ecia i´¸ dacž ´ ¸ ¸ a¸e i, a e ie,¸ eb¸ie ´chi¸ ba¸e.

C¸ aj¸ ¸ ¸ ei ¸ e¸ e adec a¸e, de¸ e ¸ ¸ ¸ ž a a¸ ¸ e,¸ eb¸ie¸ ž ´ ¸ a¸ž fa¸ a di - ¸ ¸ ¸ de¸ž¸ ¸ e i aca de¸ž¸ ¸ e. O fa¸ž de e´¸ e 0,2 ¸ ¸ eb¸ie¸ ed¸ ´ž.

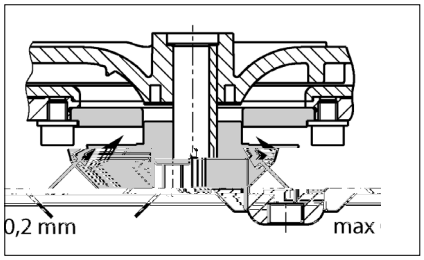

Reglarea fantei

(Va abi ¸ ai e ¸ ¸ ¸ e e c¸ ¸ cž¸).

1. B ca¸ ¸ ¸ de¸ž¸ ¸ e c¸ b¸ ca¸ž de ¸ i de´face¸ i ¸ ¸ b¸ ce ¸ a c¸ ¸ ¸ gi e i ¸ ¸ i ¸ ¸ ž h¸ ¸ ag a ž.

2. Sc a¸ ¸ i ie´a de ¸ e´i¸ e¸ ¸ ¸ de¸ž¸ ie- ¸ e i aiba de aj¸ ´¸ ¸ e i, a i¸ ei ¸ d¸ce¸ i ie´a de ¸ e´i¸ e ¸ ¸ ¸ de¸ž¸ ¸ e.

购买君格的产品，一流的质量与高端的服务是并存的。

请按照安装手册进行安装，才能确保产品达到让客户满意的工作性能。

因错误安装或误操作所引起的产品损坏会影响质保。

和所有电子设备一样，该产品在断电或者出现故障的情况下将停止工作。

如果可能造成损失，应安装独立的报警系统。

根据不同应用，可安装应急发电机或备用系统。

本使用手册包含安装、操作和维护期间必须遵守的基本信息。在设备安装和投入运行之前安装人员及技术人员/操作人员都必须认真阅读手册，并将其保存在泵或设备安装位置附近以供随手查阅。不遵守安全须知可能导致保修失效。

在本手册中，安全信息由特定的符号明确标识。忽视这些信息可能会导致危险。

一般人身危险

电压警告

注意！对设备和操作人员有危险

所有操作、维修、检查和安装人员都必须具备从事这项工作的相关资质，并通读手册内容以确保充分掌握。人员的监督、能力和职责范围由运营商负责管理。如果任何人不具备必要的技能，则必须向其提供相应的指导和培训。

严格遵守本手册中的安全说明、现行国家事故预防法规以及任何内部作业、操作和安全规章。

务必遵守所有法规、本地条例和安全法规。

电力安全隐患要特别小心。

如果存在危险（如爆炸、有毒、灼热）物质泄漏，必须安全地排放，避免危及人身或环境。同时严格遵守相关法规。

作为一项基本原则，只有关闭设备时才能在设备上进行作业。如果在输送有害物质的泵或设备上作业，必须先清洁污染物。

在作业完成后，应必须立即复原所有安全和保护组件和/或将其投入使用。根据现行法规和规定，在重新启动前必须先检查其有效性。

任何改动或更改设备的操作须征得制造商的同意。为确保安全，务必使用制造商认可的 原厂 备件和附件。使用非原装零件可能会导致保修失效。

只有用于正确用途，设备才能安全运行。在任何情况下都不得超过在“ 技术数据 ”章节给出的限值。

在开始维修或维护工作前，封锁作业区并检查起吊工具是否状态良好。

不要单独作业。一定要戴好安全帽、护眼镜和安全靴，必要时系上安全带。

在进行焊接工作或使用电气装置之前，检查有无爆炸危险。

在污水处理系统中作业的人员必须接受抗体接种以免被在系统中出现的病原体感染。出于健康考虑，无论在哪里工作一定要特别注意洁净度。

确保在工作区内无任何有毒气体。

严格遵守职业健康和安全作业法规，确保随身携带一个急救箱。

在某些情况下，泵及其输送介质可能高温灼热而导致烧伤。

当设备位于爆炸性危险区域内时，适用特殊法规！

即接即用型compli污水提升泵站通过LGA认证，适合处理厕所和小便池废水以及含有常见杂质的家庭废水。

该水箱能够浸没在深度不超过2米的水中不超过7天。

控制单元不能浸水，但具有IP44防溅等级。

如果安装合格并使用得当，该控制单元符合EMC指令2014/30/EU的防护要求，适合家用并使用普通电源供电。由于抗干扰性不够，不宜采用企业高压变压器提供的工业电源。

泵的使用必须遵守有关国家法律、法规和规定，例如：

- 建筑和地面排水系统的排污装置（ 如欧洲EN12050和12056 ）
- 家庭污水和废水（ 如德国EN12056)
- 低压系统的安装（ 如德国VDE 0100 ）
- 安全和加工材料（ 如德国BetrSichV和BGR500 ）
- 污水处理系统安全（ 如德国GUV-V C5，GUV-R104和GUV-R126 ）
- 电气系统和操作资源（ 如德国GUV-V A3 ）
- 防爆标准 EN60079-0, EN60079-1, EN60079-14, EN60079-17和EN 1127-1

- 水箱，泵及进水口夹紧法兰
- 缩径接头DN150/ DN 100，用于compli 500和1000
- 通风管套管（带软管卡箍的compli 1200柔性连接管）
- 压力排水管连接法兰
- 压力排水管柔性连接管，带软管卡箍
- 手动隔膜泵或额外DN50进水口插入式密封件
- 箱体固定材料压力排水管止回阀(compli 300、500、1000和1200）
- 控制单元（非compli 300）

工作制：间歇运行S3

泵安装必须保证抗浮力和自由直立。部件周围和上方必须至少有60厘米宽或高的工作区域以方便操作或维护

通风：通风管必须高于房顶。

进水口：在水箱前面的进水口必须安装废水闸阀。

压力排水管：在压力排水管的止回阀之后必须加装一个废水闸阀。如果系统的供货范围内不包括止回阀，则必须安装EN认证的翻板式止回阀。

压力排水管必须在本地背压水位以上设置回型弯。

必须提供泵集水坑以便处理来自泵安装区域的积水。

注意！各个组件和水箱的所有固定螺栓的拧紧扭矩不得超过6 Nm。

关闭进水口（附件）处的闸阀以防止在安装过程中漏水。

compli 300：选择所需的DN100进水口，在侧面或顶部标记处使用102ø孔锯或竖锯切开进水口，然后去除边缘毛刺。使用六角螺钉将附带的夹紧法兰固定到进水口，不要拧紧。

取出设备固定支架并拧到水箱上，然后在安装了夹紧法兰的水箱上推入进水管， 并尽量让进水管深入水罐。

在地板上标记膨胀管的位置，然后钻孔并安装膨胀螺丝。

现在紧固夹紧法兰，然后使用木螺钉和垫片将设备固定到地板上。

所有其他compli型号：必须使进水管从夹紧法兰口尽量深入罐体，然后对齐。

如果使用DN150侧进水口，必须首先在标记位置处使用ø152的孔锯切开进水口，然后去除毛刺。标准进水口必须使用封闭套件（附件）封闭，并复位启动水位。

注：对于compli 500和1000，如果先在夹紧法兰安装附带的缩径接头，进水口管径可从DN150缩小至DN100

拧紧夹紧法兰上的六角螺钉

标记水箱和地板固定孔的位置，然后钻孔。

将木螺钉、垫圈和膨胀管一起插入孔内并拧紧。

注意！确保水箱不会由于螺钉拧得过紧而变形，否则可能会导致泄漏。

compli 1200设备的水箱在两侧使用两个支架加固。

使用DN70套管将通风管连接到水箱右上方，使之高于房顶。

对于compli 1200，在标记处切断右上方 ø78 mm管道并去毛刺。然后使用DN70柔性接头连接通风管，使之高于房顶。

安装以下部件到出口法兰上：

1. 止回阀（不在供货范围内时）

2. 截止阀（附件）

3. 连接法兰

4. 使用柔性接头连接压力排水管并在本地背压水位以上设置回型弯。

此进水口用于连接手动隔膜泵。

使用孔锯在标记处切开管道连接。然后去除毛刺边缘。

将插入式密封件58/50放入到位。

将外径为50毫米的进水管穿过密封件推入水箱内，到水箱底部的距离至少保持50毫米。

将手动隔膜泵固定在墙上易于检修的位置，并连接到插入式管道上，然后将压力排水管连接到手动隔膜泵。在这里，压力排水管同样必须在本地背压水位以上设置回型弯。

使用孔锯，沿预切沟槽切开进水口。去除边缘毛刺。

将插入式密封件58/50放入到位。

将外径为50毫米的进水管穿过密封件推入水箱内。

注意！连接设备侧面低水位进水口的管道必须配有一个弯头，尽可能靠近设备。这个弯头的内底到地板的高度至少为180毫米。在连接管内集结的气穴可能导致溢流问题，从而产生背压。为了防止背压，进水管必须在最高点排放空气。为此可将通风管连接到水箱的通风装置。

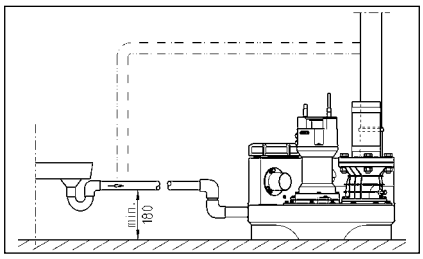

只有有资质的电工才能执行泵或控制装置的电气作业。

开展任何作业之前拔出电源插头，确保他人不会再次接通电源。

注意！切勿把电源插头置入水中！插头进水可能会造成故障和损坏。

必须遵守各种情况（如EN）适用的标准、国家法规（如德国VDE）以及本地电网运营商的规定。

注意工作电压（见铭牌）！

设备带有液位控制器，可根据水位启动和停止泵。一旦发生故障，即使只是暂时性的故障，集成式报警系统就会发出蜂鸣声

如果泵过热，电机绕组内的热敏开关会停止电机运行。在热敏开关切断系统运行后应先拔出电源插头，再排除故障。如果仍然通电，设备可能会自动重新启动。这不会产生直接的故障消息。

泵电源插座必须根据相关法规正确安装在干燥房间内高于背压水位的地方并配备至少16 A（延时型）的保险丝。

污水处理装置的电气连接需要提供一个5孔 CEE电源插座。该插座必须位于干燥房间内，高于背压水位（3/N/PE～230/400 V）。

注意！泵只能使用慢熔断保险丝或C特性自动熔丝。

控制单元只能安装在干燥房间内高于背压水位的地方，随时保持外壳封闭。安装位置必须方便检修。高湿度和结露都会损坏控制装置！

工厂针对各型号的标准进水口高度设置了启动点和关闭点。

如果使用不同的进水口高度，就必须重新定义启动点（不适用于compli 300），否则进水口可能会出现背压。

重新设置后控制单元会自动将报警（+2厘米）和（双泵型）峰值负载（+4厘米）的开关点复位。

暂时关闭系统，将手动-0-自动开关设为“ 0 ”。通过控制单元右侧的“ 模拟评估器 ”模块调节启动点。暂时取下该模块的透明盖。向集水室注水至进水口开口底部边缘。

在模拟评估器上有三盏指示灯，分别标为P1、P2和P3。应该只有P2亮起。如果P3也亮起，则必须重新调节。

转动P1下面的小调节螺钉，顺时针转动完整的一圈或两圈。然后取浮子开关，将其浸入集水室下关闭点以下，使其再次浮起。如果P3仍亮起，再次顺时针转动调节螺钉一整圈并再次浸没浮子开关。

重复该过程直到P3不再亮灯，然后逆时针往回转动调节螺钉直到P3再次亮起的确切点。至此启动点设置完毕。

故障消息采用声光两种形式发出。标准电源供电报警系统报告泵内电机的故障（红色LED，不适用于AD 00或compli 300），同时内置声音报警响起。该声音只有在排除故障或完全停用装置时才能关闭。

如果安装现场不合适使用声音报警，可以通过电路板上的无源触点（端子40和41）发出报警信号（compli 300的端子在插头内）。集中式报警的无源触点最高容量为5 A/ 250 VAC。该触点在故障排除后重新断开。

标准报警装置由电源供电，即断电就无法触发高水位报警。为了确保即使断电也能正常工作，必须使用可充电电池。打开透明盖。将电池组连接至接线夹，并使用原电缆扎带固定到PCB的预定位置（G1）处。在持续报警的情况下，电池组可向报警系统供电约1小时。

在恢复通电后，电池自动重新充电。空电池在充电约24小时后就可以投入使用，约100小时完全充满。

定期检查电池的状态！具体做法是断开设备电源，触发高水位警报。声音信号的音量在数分钟后没有明显降低迹象。电池使用寿命大约为5年。注意电池上的日期，五年后应及时予以更换。

只能使用9V可充电电池！使用干电池有爆炸危险！

控制单元可以安装选配的计时器（不适用于compli 300）。具体做法是剪短计时器的接头到约8毫米，将其插入到电路板BSZ处的4孔插座。如果再次开机后没有计时器显示，那么将计时器旋转180 °。

不适用于compli 300。拆下密封的跳线（BRX/BRX1）。为了避免跳线丢失，将它装到两针连接器的一个针脚上。

打开控制单元上的透明盖。

在端子“ S+ ”和“ S- ”上可以连接一个额定电流不超过30mA、12 VDC的额外声音信号发生器。内部报警蜂鸣器可以独立地打开或关闭。

在compli 300的情况下，可作为附件安装一个独立于主电源供电型报警装置。水箱上有一个专门的安装底座。

连接交流230V的报警灯（电流最大1A）至接线端子N和41.

一个带绝缘的线桥接在端子U~和41之间，电路将受到保险管F1的保护。

跳线BRX2设置：闪烁灯无需BRX2设置（连续===），报警灯应有BRX2位置（闪烁 (_П_П_）

1. 打开水箱的维护盖。

2. 打开进水口和压力排水管的截止阀。

3. 将设备接通电源，并观察旋转方向指示。

4. 注满水箱至启动水位。

5. 泵现在启动并抽空水箱。通过维护口观察泵送过程。

6. 用手慢慢抬起液位控制器的浮子，直到高于启动点并保持直到触发报警。

7. 然后使用盖子和密封件封闭维护口。

8. 通过开关运行数次，确保水箱、接头和管道不漏水。

自动运行是装置的正常运行模式。因此摇臂开关必须设为“ 自动 ”模式。泵可通过集成的液位控制器根据水箱水位来启动和关闭。泵运行时绿色LED灯亮起（在compli 300的情况下表示准备好运行）。

注意！如果过量污水流入设备（例如排空泳池时），打小进水口截止阀，直到设备可以再次正常运行，反复启动和关闭（不要连续泵送，否则可能导致泵电动机过热）。

将模式开关设为“ 手动 ”，可使泵长时间运行，不受污水水位影响。因此应通过维护口来观察泵出操作。

将模式开关设为“ 0 ”，可关闭泵，但报警系统仍保持激活状态。

在维修和维护控制装置和泵前，不要简单地将选择开关拨到“ 0 ”位置，而应该拔掉设备电源。

为了保持可靠运行，每月目视检查装置一次，包括管道连接。

我们建议您根据EN12056-4维修设备。

为确保设备长期可靠，建议您签订维修合同。

污水提升装置应由专业人员进行定期检修保养。商业楼宇的维保周期是3个月，公寓楼的维保周期是6个月，独立式住宅是12个月。

在进行任何作业之前都必须先断开泵和控制装置的电源，并采取措施以确保其不再通电。

检查电缆有无机械或化学性损坏。如有破损或扭结，予以更换。

我们建议维护工作应包括以下内容：

1. 检查连接点是否漏水，并检查设备和管件的周边区域。

2. 操作截止阀，检查它们能否轻松移动。必要时予以调节和润滑。

3. 打开并清洁翻板式止回阀；检查阀座和阀球（阀门）。

4. 清洗泵及与箱体连接管道；检查叶轮与轴承。

5. 检查润滑油。必要时加满或更换润滑油（水泵有油腔时）。

6. 清洁水箱内部（必要时或者特别要求时）；例如清除任何油脂。

7. 检查集水箱的状况

8. 每2年用水冲洗系统一次

9. 检查设备的电气部分。控制单元本身是免维护的，但如果配备了可充电电池，则应该定期检查，以确保电池状态良好。具体做法是断开设备的电源，并用手慢慢抬起液位控制器的浮子，然后保持直到触发报警。此外，必要时清洁浮子。

完成所有的维修任务后必须进行试运行，然后将设备重新投入使用。该检修必须记录在案，注明重要数据以及所有维修任务的细节。

（仅适用于08/2、25/2和35/2型号）。首先，拧开泵周围的六角螺栓或内六角螺栓，从水箱上卸下泵和叶轮的组件。油腔堵头标记为“ Ol ”。为了检查机械密封，润滑油及任何残余物必须从油腔中排出，并收集在一个干净的测量容器内。

如果润滑油含水（乳浊液），必须更

换润滑油，并在300个工作小时后再检查一次，而不是在6个月后！

- 但是，如果油被水和污染物污染，则除了润滑油，还要更换机械密封。
- 为监测油腔，也可将“ DKG“ 密封螺栓取下，更换为 ” DKG“ 泄漏探测传感器。

仅适用于08/2、25/2和35/2型号）。为保证可靠运行，第一次更换润滑油应在运行300小时后进行，以后每运行1000小时更换一次润滑油。

即使运行时数很少，仍应每年至少更换一次润滑油。

如果泵送极强研磨成分的废水，应相应缩短更换润滑油的时间间隔。

使用HLP液压矿物油，粘度等级22至46，如美孚DTE22、DTE24、DTE25，来更换油腔中的润滑油。

MultiCut系列泵UC08/2M和UC25/2M的润滑油用量为380 cm3，而MultiFree系列泵UC25/2BW和UC35/2BW为1000毫升。

贮油器只能加注一定量的润滑油。过多会导致泵无法运行。

仅适用于带切割系统的泵。必须检查泵壳螺钉以及连接和固定螺钉，以确保其紧固。必要时拧紧。

如果泵性能下降、运行噪音越来越响或切割性能降低（泵易于堵塞），必须联系专业人员检查叶轮和切割系统的磨损情况，必要时予以更换。

使用合适的工具（例如塞尺）测量切割转子和切板之间的切割间隙。切割间隙超过0.2毫米时必须调低。

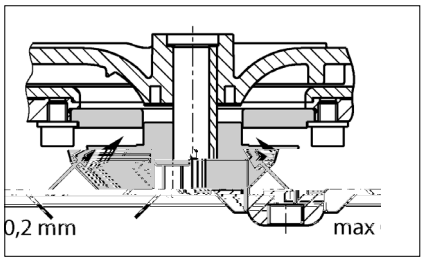

1. 用一块木头阻塞切割转子并拧松中心内六角螺钉。

2. 取下压缩片、切割转子和调节垫片，然后再次装上压缩片和切割转子。

3. 阻塞切割转子，并再次拧紧内六角螺钉（拧紧扭矩8 Nm）。

4. 检查切割转子移动自由度以及切割间隙（不得超过0.2毫米）。

如果切割间隙仍然太大，必须再拆下一个调节垫片。重复步骤1-4。

- 检查电源电压、保险丝和接地故障断路器。只能使用相同容量的保险丝来更换损坏的保险丝！如果保险丝再次烧断，请联系有资质的电工或我们的售后服务。
- 230/12V控制变压器的保险管（延迟型）、电机接触器和230V交流电源发生故障。只能使用相同容量的保险丝来更换损坏的保险丝！
- 如果电源线损坏，只能联系制造商来更换。
- 如果浮子开关受阻，关闭进水口截止阀，打开维护盖，疏通堵塞。
- 因为泵堵塞，电机绕组内的热敏开关可能关闭了系统。在这种情况下，关闭进水口截止阀，排空水箱，拔出电源插头，拆下泵组件并疏通堵塞。
- 检查压力排水管中的截止阀是否完全打开。
- 如果压力排水管堵塞，用水冲洗压力排水管进行清洁。
- 如果止回阀阻塞，清空压力排水管并清洁止回阀。
- 如果通风系统堵塞，清洁引自泵水箱的通风管，检查通风孔。
- 如果设备在开始泵送时工作正常，但在结束时声音变得非常响，则必须由合格的电工在控制单元重新定义关闭点。
- 电源相序错误或缺相- 因此降低或停止泵输送。电源连接只能由合格的电工进行维修操作。
- 泵通过一个集成的电路断路器进行保护。如果过载或电动马达故障，该断路器会关闭泵。在发生这种情况后，它必须手动复位以便再次运行泵。控制箱要求由合格的电工才能打开控制单元来按下该复位按钮。
- 泵送流量过低或进水流量过高导致水箱水位过高。清除泵或压力排水管内的任何堵塞物和/或消除过多的流入量。
- 综合液位开关故障。请致电我们的售后服务。
- 水箱内没有剩余的水。加注少量的水。
- 注意：如果在泵送之后LED灯短暂亮起，这不属于故障信号。
- 泵的停止水位太低。

拧下集水箱前面的综合液位开关上的三颗固定螺钉。小心向右旋转到关闭点可设置更高的水位。重新拧紧螺钉。在泵送期间如果LED2熄灭，则说明达到关闭水位。

注意！也可能同时需要重新调节启动水位（请参阅“ 重新定义启动水位 ” 章节）。

注意：如果感到正常呼噜声太大，也可以这种方式将停止水位设到一个更高的水位。）

TECHNISCHE DATEN - TECHNICAL DATA -CARACTÉRISTIQUES TECHNIQUES- TECHNISCHE GEGEVENS - DATI TECNICI - DANE TECHNICZNE - TECHNICKÉ ÚDAJE - TECHNICKÉ ÚDAJE - MŰSZAKI ADATOK -DATE TEHNICE - 技术指标

compli 100

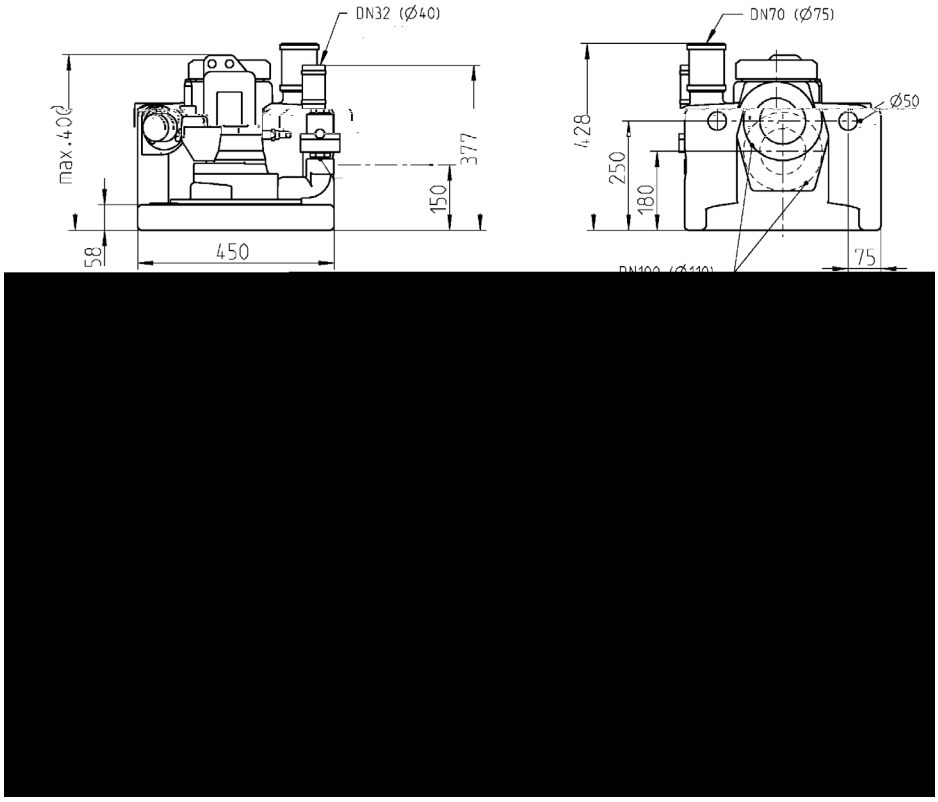

compli 300

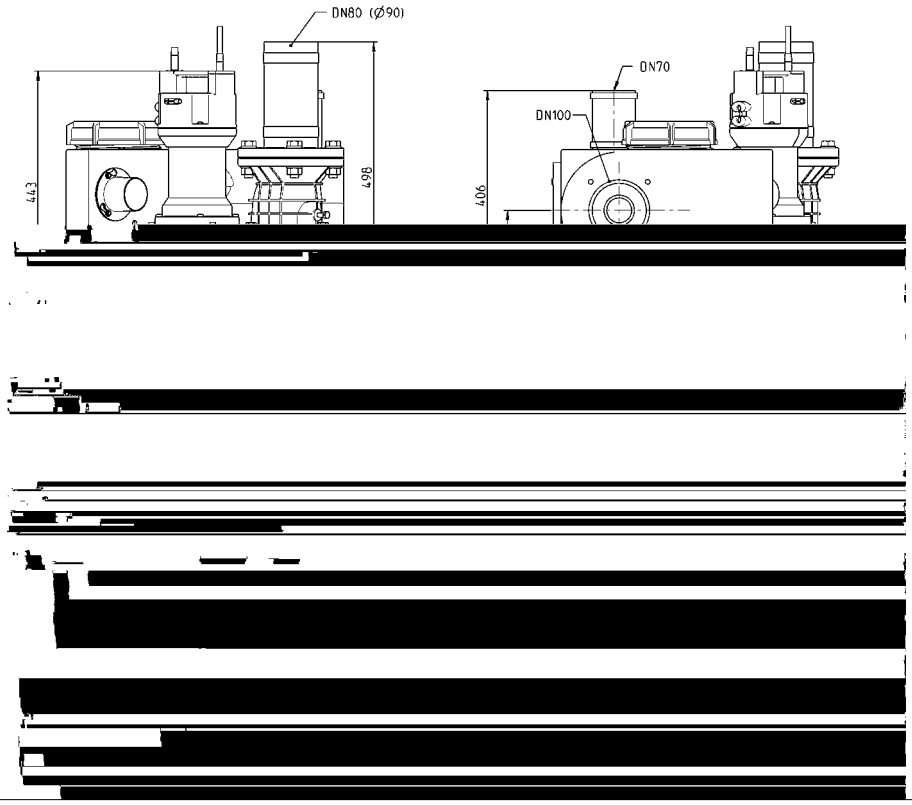

compli 400

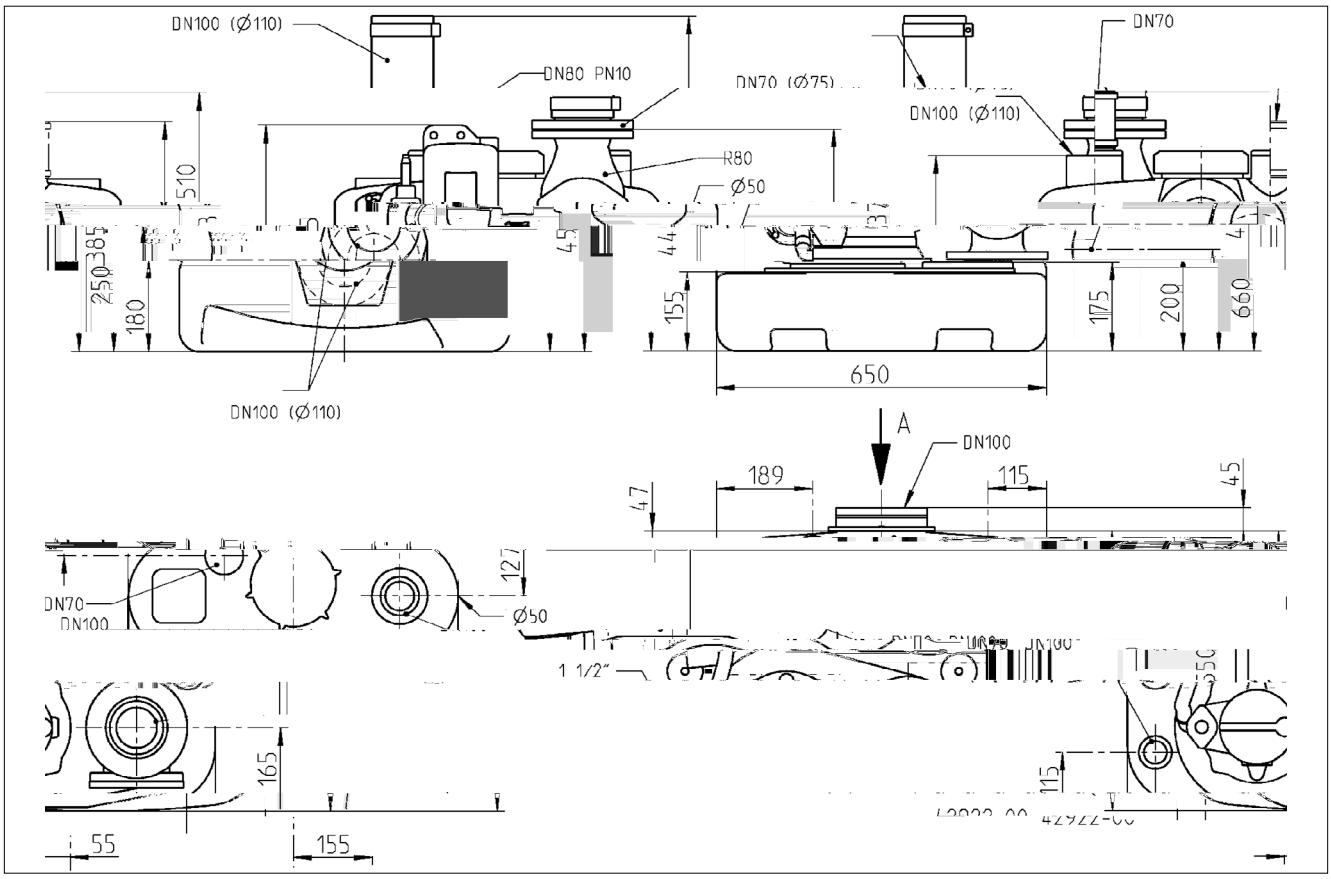

compli 500

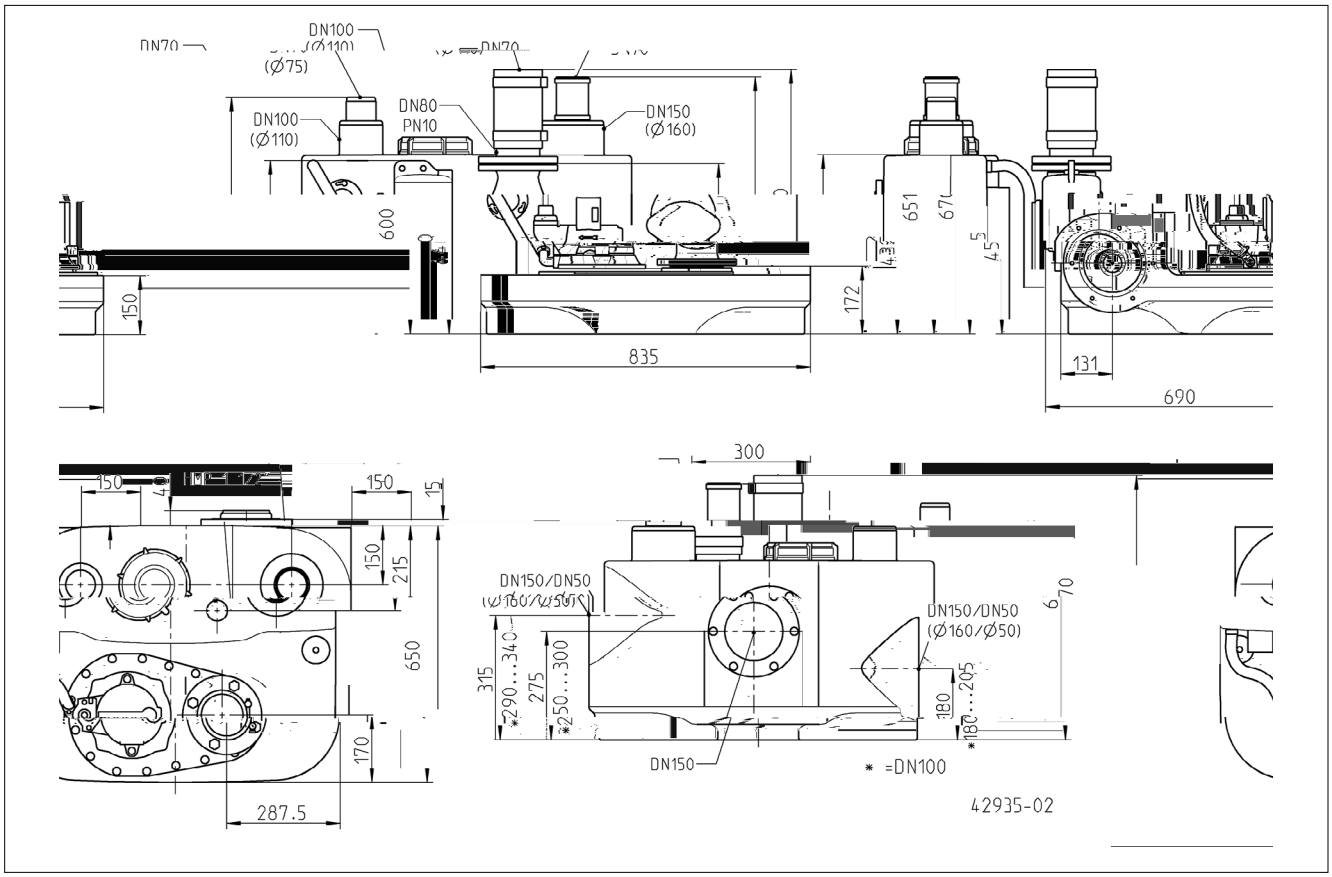

compli 500 M

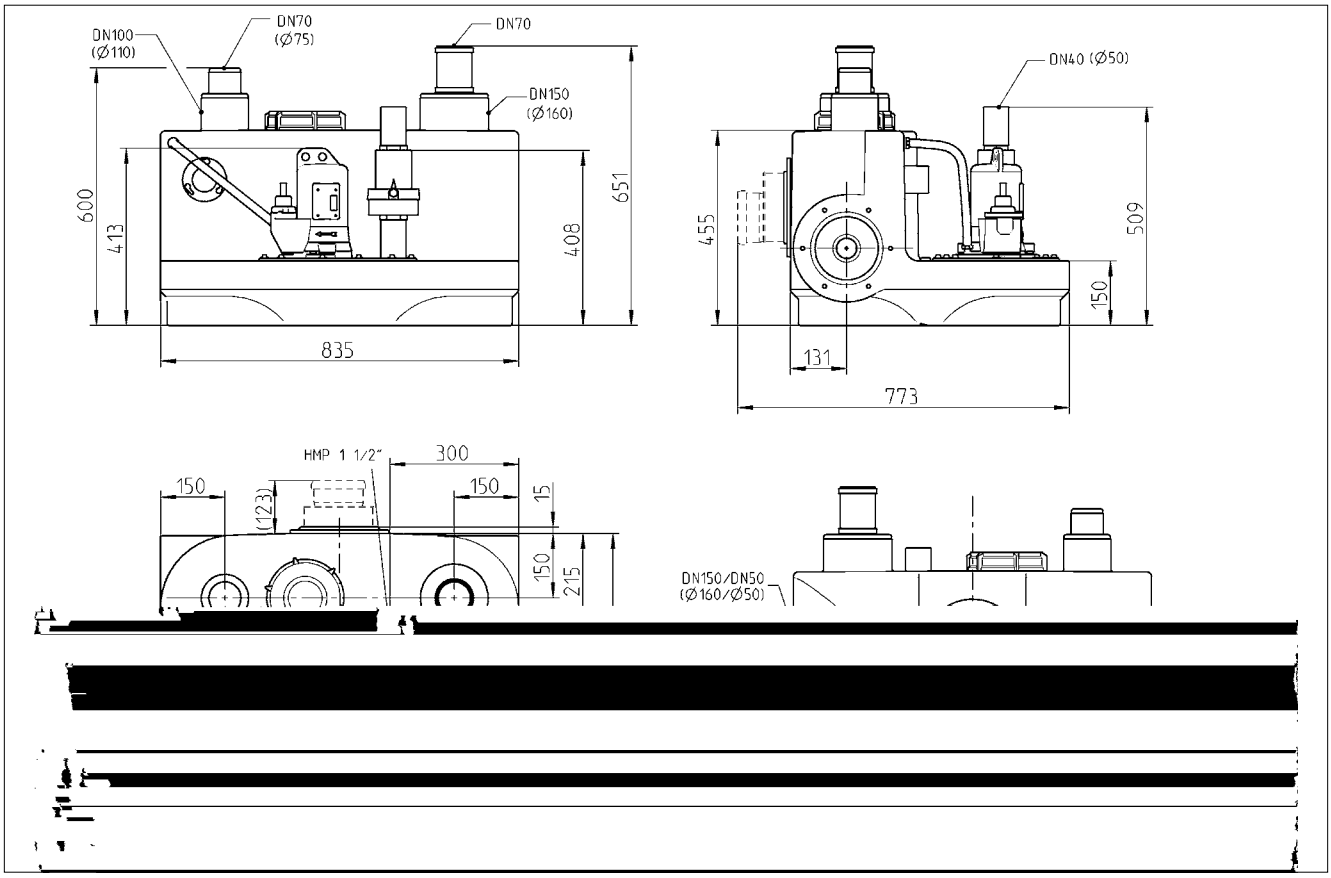

compli 1000

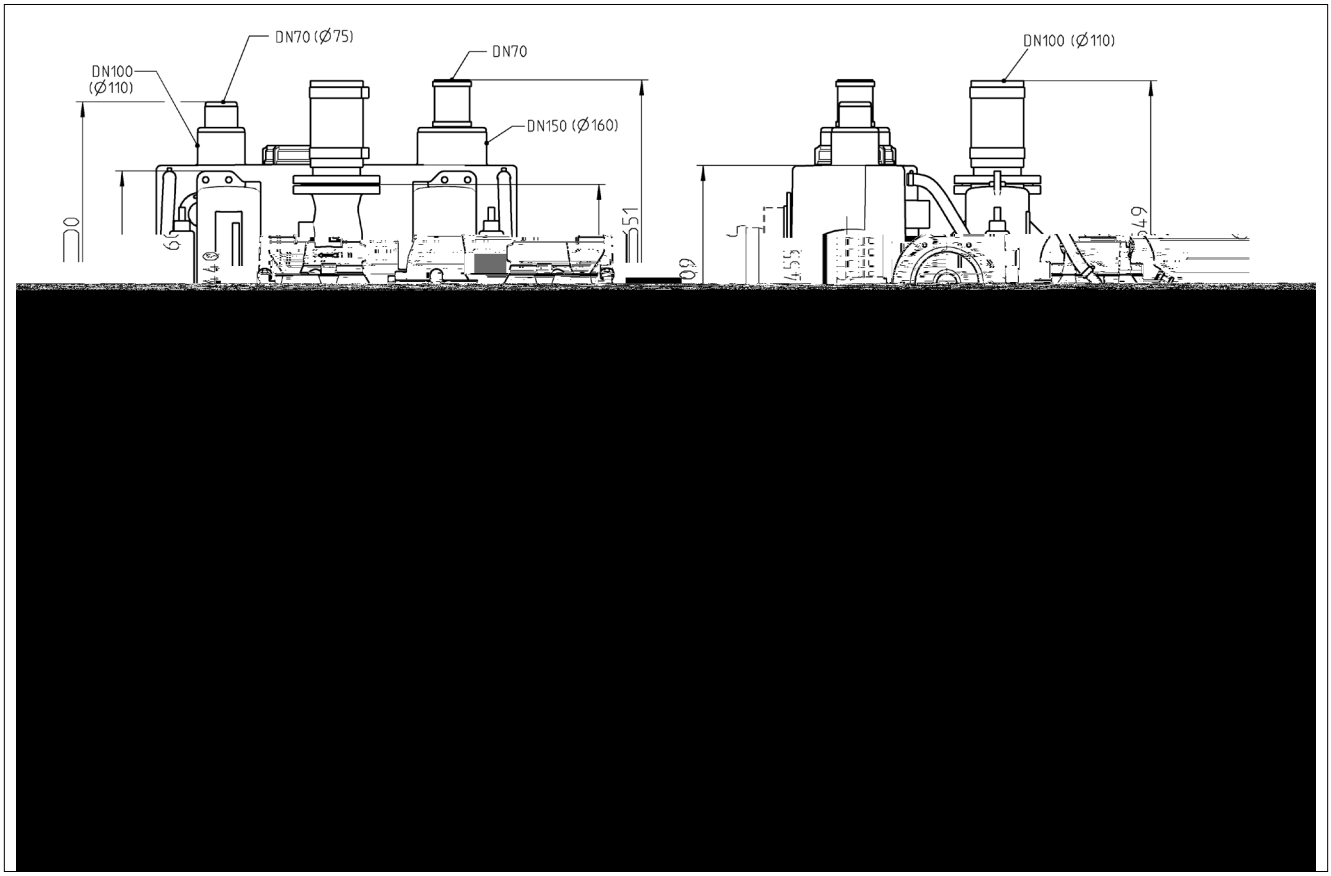

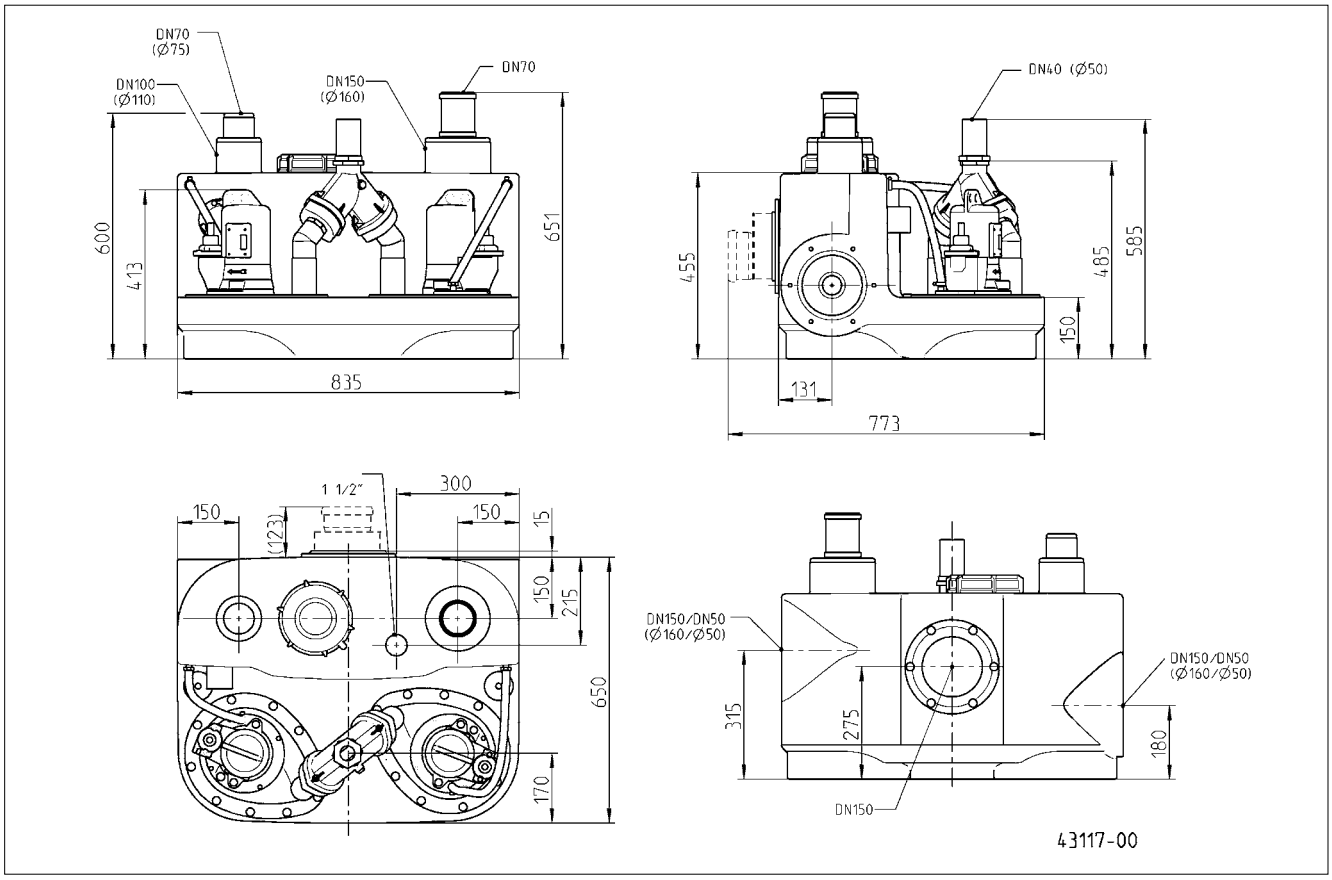
DN70
(Ø75)
DN100
(Ø110)
DN150
(Ø160)
DN70
600
413
651
835
DN40 (Ø50)
455
485
585
150
131
773
1 1/2"
300
150
(123)
150
15
150
215
650
170
DN150/DN50
(Ø160/Ø50)
315
275
180
DN150/DN50
(Ø160/Ø50)
DN150
43117-00

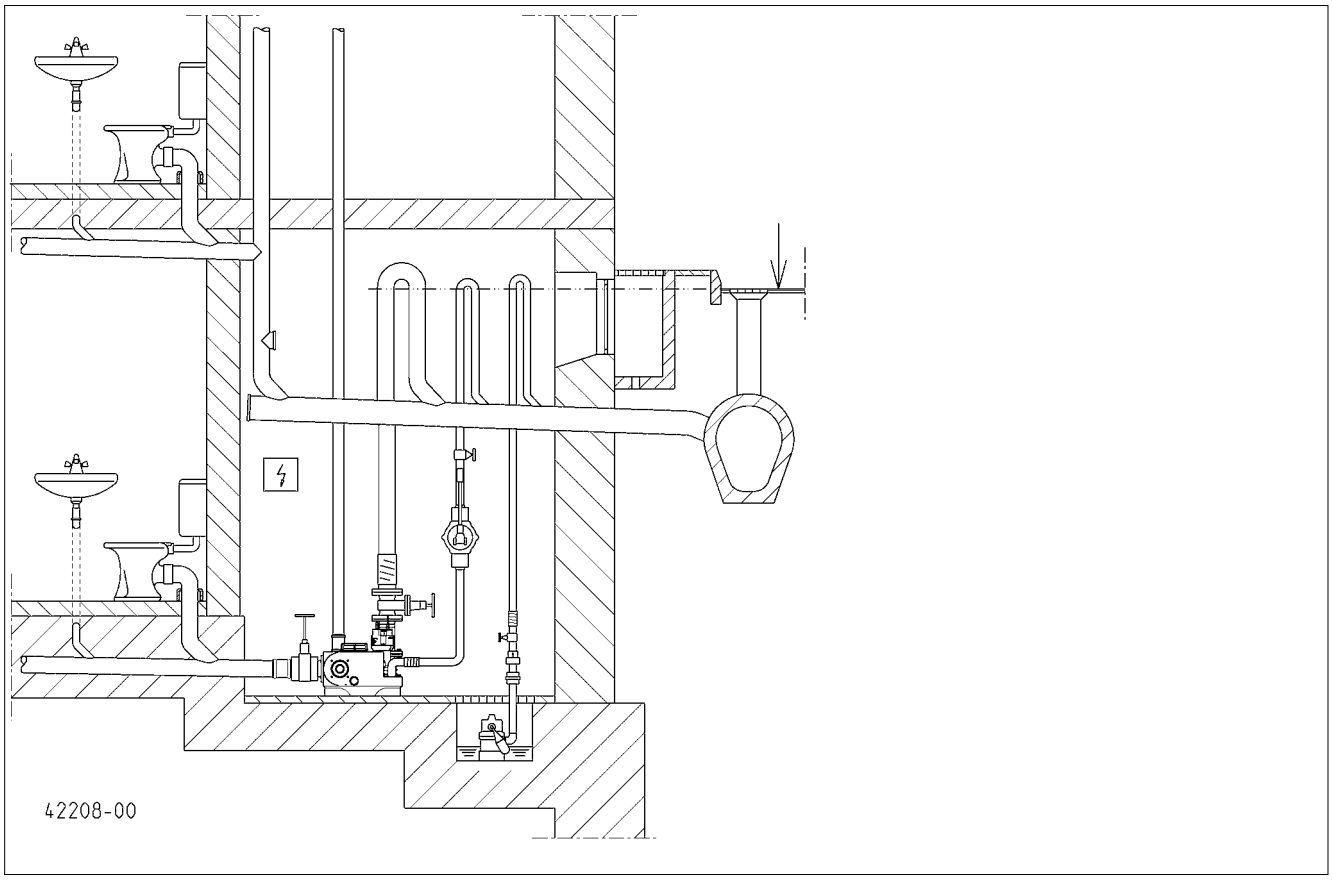
42208-00

		... 300 E	... 400 E	... 1010 BWE	... 400
	[kg]	29	55	118	56
	PN 10	DN 80	DN 80	DN 80	DN 80
	[ ]	50	70	70	70
	S3*	10 %	25 %	25 %	30 %
P1	[kW]	1,37	1,55	1,55	1,25
P2	[kW]	0,98	1,10	1,10	0,87
U	[V]	1/N/PE z230	1/N/PE z230	1/N/PE z230	3/N/PE z400
f	[H]	50	50	50	50
I	[A]	6,0	7,1	7,1	2,2
	[i $^{-1}$]	2700	1428	1428	1390
			AD 69 ECP	BD 610 ECP	AD 00 P

		... 510/4 BW ... 1010/4 BW ... 1210/4 BW	... 515/4 BW ... 1015/4 BW ... 1215/4 BW	... 525/4 BW ... 1025/4 BW ... 1225/4 BW	... 525/2 BW ... 1025/2 BW ... 1225/2 BW	... 535/2 BW ... 1035/2 BW ... 1235/2 BW
	[kg]	66/118/118/145	66/118/118/145	66/118/118/145	68/120/122/149	72/125/131/158
	PN 10	DN 80	DN 80	DN 80	DN 80	DN 80
	[ ]	70	70	70	70	70
	S3*	45 %	30 %	15 %	25 %	25 %
P1	[kW]	1,3	2,2	3,0	3,3	4,8
P2	[kW]	1,0	1,7	2,2	2,6	4,0
U	[V]	3/N/PE z400	3/N/PE z400	3/N/PE z400	3/N/PE z400	3/N/PE z400
f	[H]	50	50	50	50	50
I	[A]	2,8	3,9	5,1	5,4	7,8
	[i $^{-1}$]	1451	1405	1363	2807	2857
		AD 25 P / BD 25 P	AD 46 P / BD 46 P	AD 46 P / BD 46 P	AD 46 P / BD 46 P	AD 610 P / BD 610 P

		... 108/2 ME ... 508/2 ME ... 1008/2 ME	... 108/2 M ... 508/2 M ... 1008/2 M	... 120/2 M ... 520/2 M ... 1020/2 M
	[kg]	42/50/77	41/49/75	43/51/79
	PN 10	DN 32/40/40	DN 32/40/40	DN 32/40/40
	[ ]	7	7	7
	S3*	10 %	35 %	25 %
P1	[kW]	1,70	1,65	2,30
P2	[kW]	1,14	1,24	1,85
U	[V]	1/N/PE z230	3/N/PE z400	3/N/PE z400
f	[H]	50	50	50
I	[A]	7,5	2,8	3,9
	[i $^{-1}$]	2584	2674	2860
		AD 08/2 MEP	AD 00 P / BD 00 P	AD 46 P / BD 46 P

* E a e f 40%: 4 i . a i a d 6 i e (C c e d a i 10 i .);
E a i : 40%: 4 i . di f i a e + 6 i . di a a (d a a de cic 10 i .)
P k ad 40%: 4 i . a 6 i . e ž ka ž ac h c k 10 i .)
4 c a 6 c e (cik id 10 c)

E a e: 40% = 4 i de ice e 6 i de a e (D e d je 10 i)
P k ad 40%: 4 i ac i 6 i (C a c k 10 i);
P k ad 40%: 4 i e ž d ka a 6 i e ž ka (d ba a ia c k 10 i);
E a 40%: 4 i f c i e j 6 i a ž (i a i a i 10 i)

Leistung - Performance - Puissances - Capaciteit - Prestazioni - Wydajności i moce - Výkony - Výkony - Teljesítmény - Capacități - 性能参数

H [m]	1	2	3	4	5	6	7	8	9	10	11	12	13	14	15	16	17
c|↓ i 300 E	30	29	28	24	22	19	15							**Q [m³/h]**			
c|↓ i 400 E	48	40	33	27	20	13											
c|↓ i 1010 BWE	52	44	37	29	22	13											
c|↓ i 400	48	40	33	27	20	13											
... 10/4 BW	52	44	37	29	22	13											
... 15/4 BW	69	62	56	49	42	36	27	19									
... 25/4 BW					56	49	42	32	22	13							
... 25/2 BW	69	64	58	52	47	42	37	33	28	23	20	14	8	1			
... 35/2 BW	85	80	75	71	66	62	57	54	50	47	44	39	36	33	30	26	21
... 08/2 ME		17		16		14		12		9		7		4			
... 08/2 M		17		16		14		12		9		7		4			
... 20/2 M								16		14		12		10		8	

compli 300

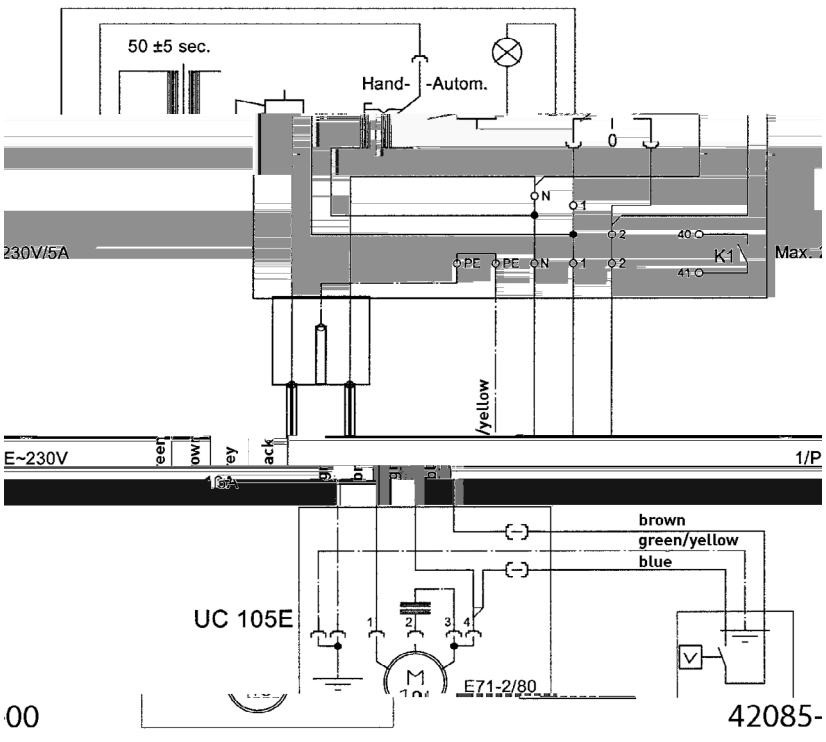

AD 69 ECP

Ei e a age - Si g e - i - U i de c a de P e i e - Rege a a ee e ke - dige i a ie - C a d i g - S ik i - a acji jed ej - d c jed ka jed d ch a e - Riade ie a a h iade ia - Eg edi e de e je - Si de c a d i a ie i di id a - 单泵系统

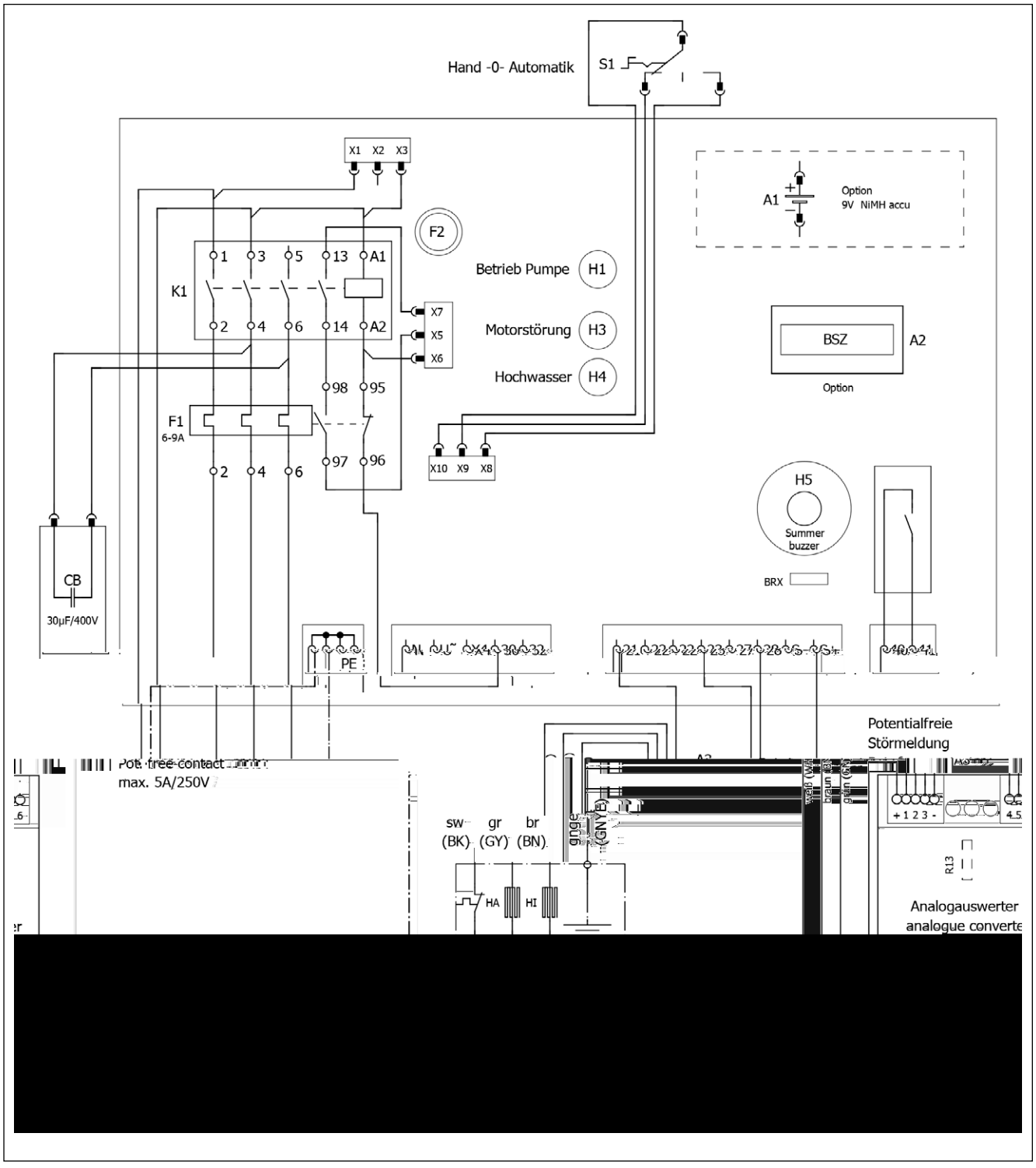

AD 08/2 MEP

Ei e a age - Si g e - i - U i de c a de P e i e - Rege ae a ee e ke digei e a ie - C a d i g - S e ik i e a acji jed ej - d c jed ka jed d ch a e - Riade ie a e a h e iade ia - Eg edi e e de e je - Si e de c a d i e a ie i di id a - 单泵系统

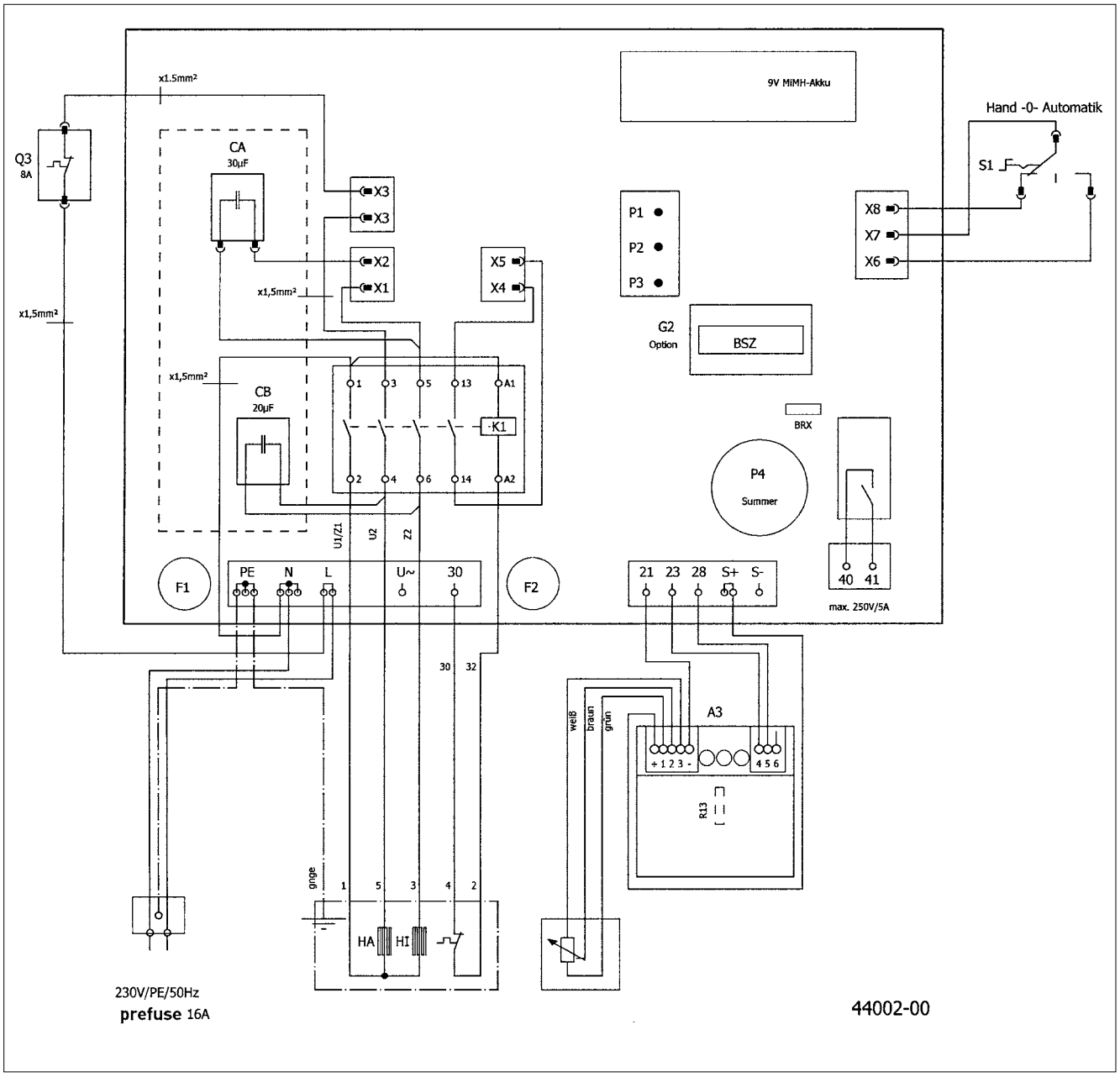

AD ... P

Ei e a age - Si g e ¬ i - U i de c ¬ a de P ˆ e ¬ i e - C ¬ a d ˆ i g - Rege ap a ee e ke ¬ dige i ˆ a a ie - S p ik i ˆ a acji jed ¬ ej - ˇ d c jed ˆ ka jed d ¬ ch a e - Riade ie ˆ a ˆ a h p iade ia - Eg edi bp e de ˆ e ¬ ˆ je - Si ˆ a de c ¬ a d ˇ i ˆ a a ie i di id a ˇ - 单泵系统

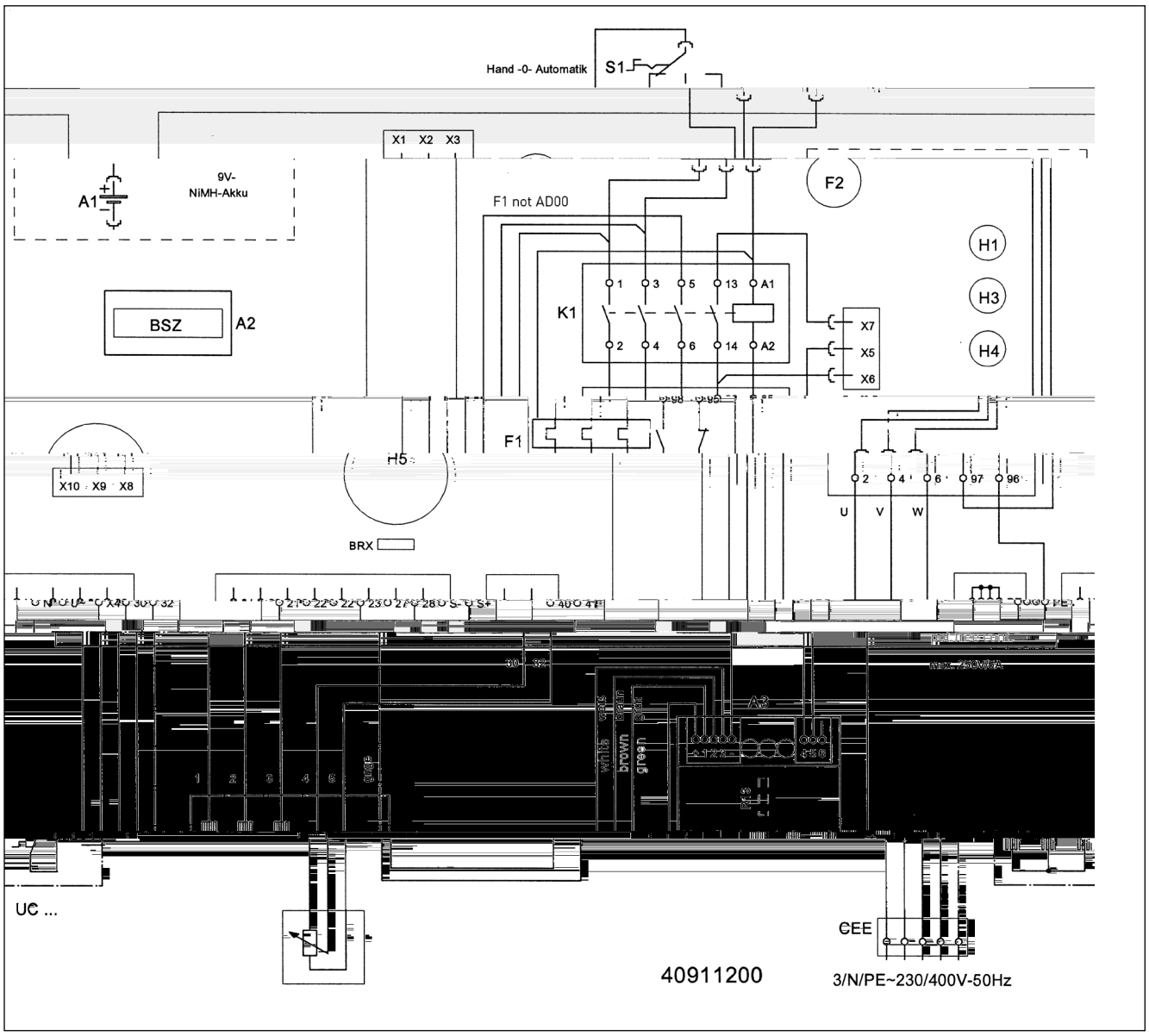

BD 610 ECP - compli 1008/2 ME

D e a age - D e i - C a d d i U de c a de P e d b e - Rege a a ee d bbee i a a ie - C a d d i - S e ik i a acji d ej - d c jed ka d j a e - Riade ie'd j h ia iade ia - Ke - b e de - Si a de c a d i a a ie d b - 双泵系统

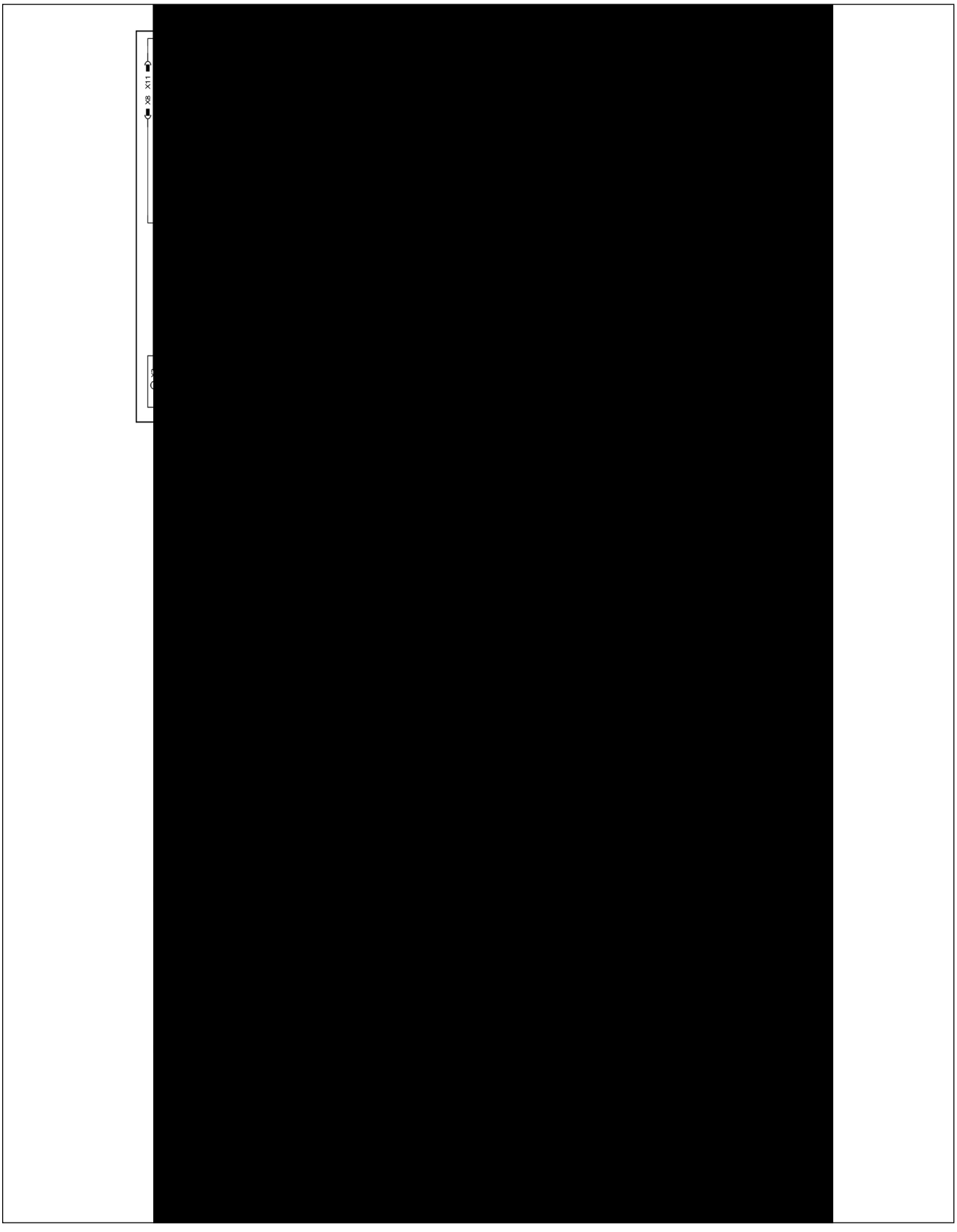

BD 610 ECP - compli 1010/4 BWE

D e a age - D e i - U de c a de P e d b e - C a d d i - Rege a a ee d bbe e i a ie - S e ik i a acji d ej - d c je ka d ji a e - Riade ie d ji h ia iade ia - Ke be e de - Si a de c a d i a ie d b - 双泵系统

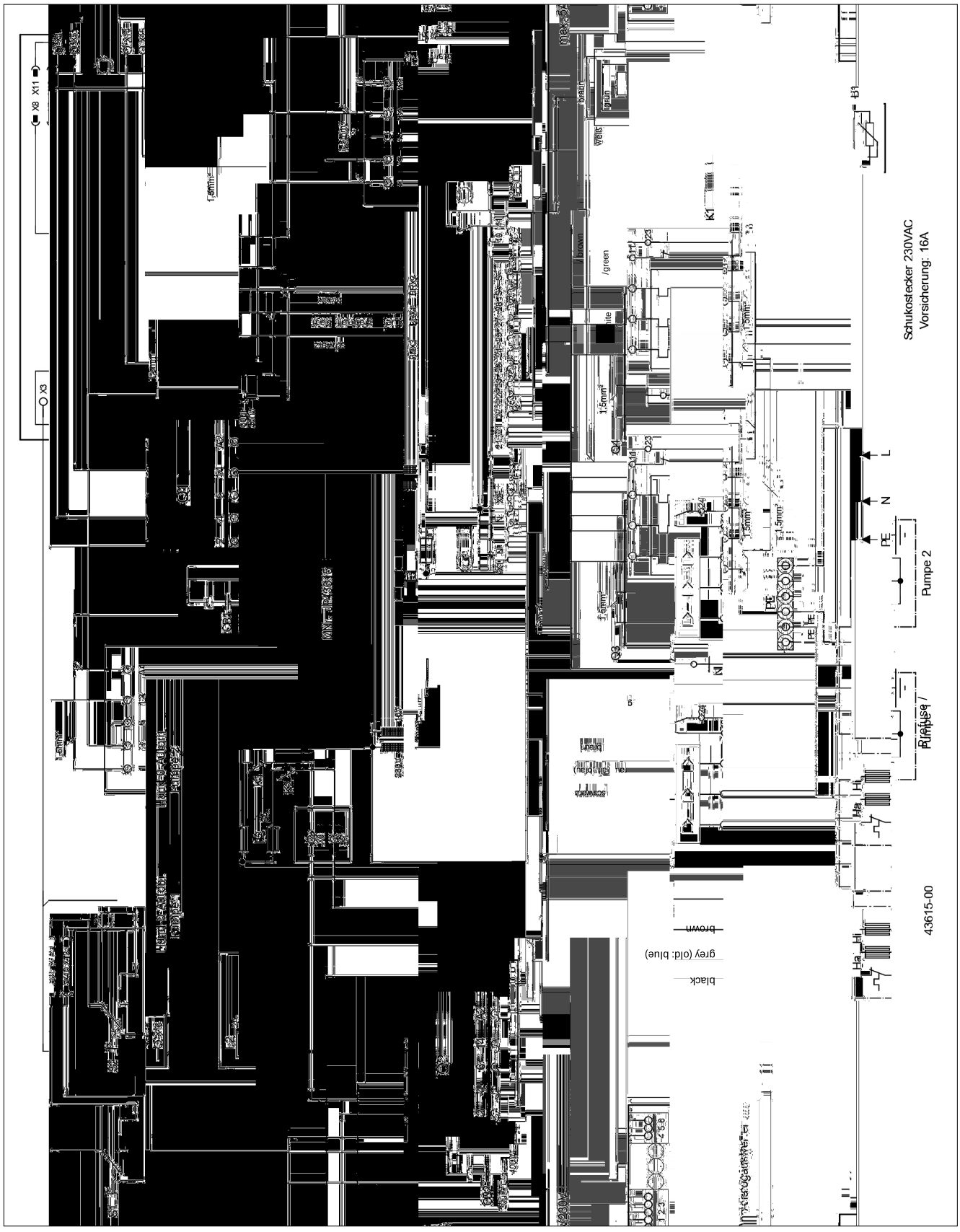

BD ... P

D e a age - D e i - U de c a de P ed b e - C a d d i - Rege a a ee d bbee i a a ie - S e ik i a acji d ej - d c jed ka d ji a e - Riade ie d ji h ia iade ia - Ke b e de - Si a de c a d i a a ie d b - 双泵系统

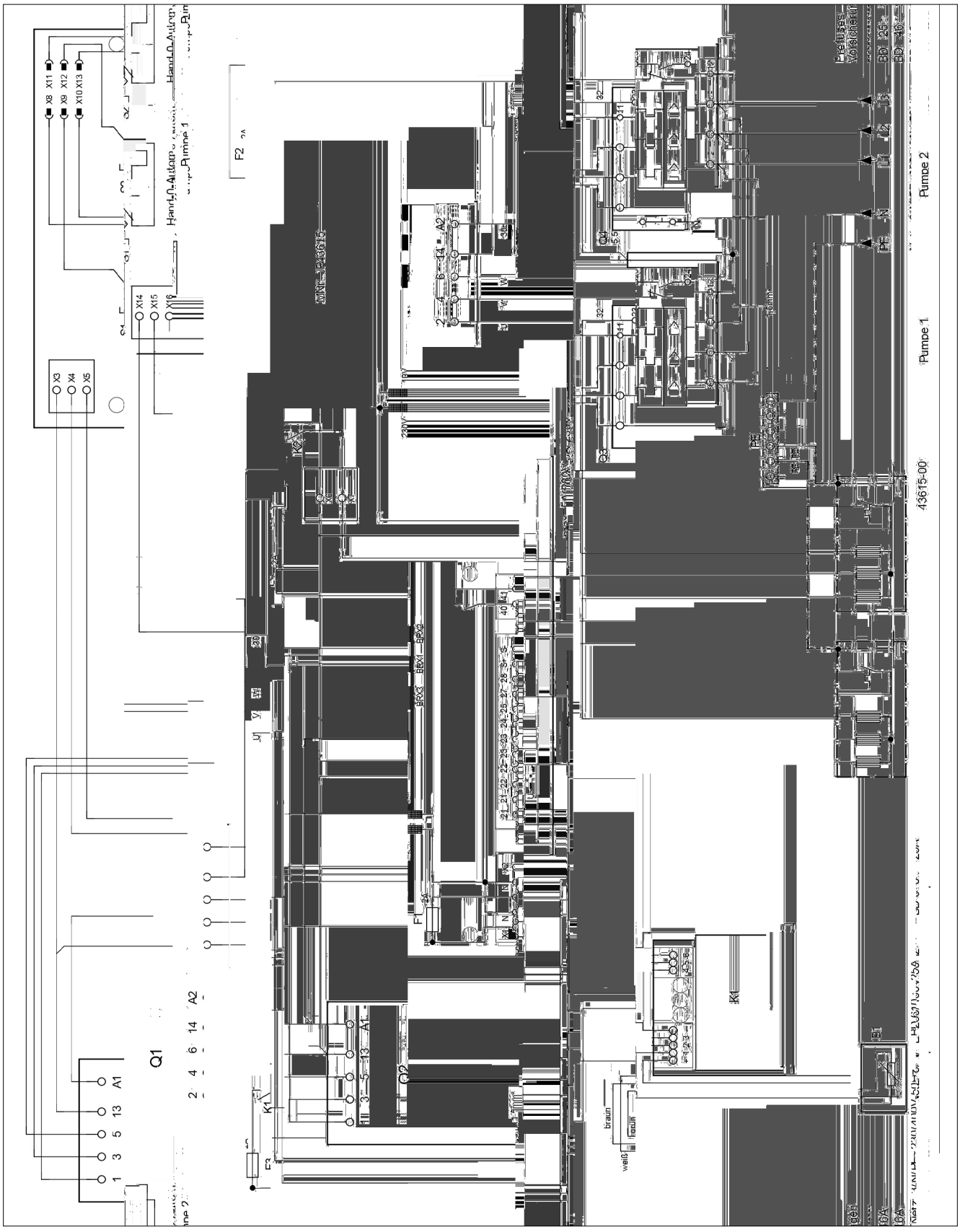

CE 0197

JUNG PUMPEN GmbH - Industriestr. 4-6 33803 Steinhagen, Germany

13

452.12.1509 - 453.12.1509

EN 12050-1:2001
Fäkalienhebeanlage

- cl i 108/2 ME (JP09347/5)
- cl i 108/2 M (JP09346/5)
- cl i 120/2 M (JP09877/5)
- cl i 300 E (JP09496/0)

- cl i 400 E (JP09770/5)
- cl i 400 (JP00637/9)
- cl i 400 E (JP09324/5)
- cl i 400 (JP09322/9)

- cl i 510/4 BW (JP09191/1)
- cl i 525/2 BW (JP09194/1)
- cl i 515/4 BW (JP09192/1)
- cl i 535/2 BW (JP09195/1)
- cl i 525/4 BW (JP09193/1)
- cl i 508/2 ME (JP43128/0)
- cl i 508/2 M (JP43129/0)
- cl i 520/2 M (JP43130/0)

- cl i 1010/4 BWE (JP09273/2)
- cl i 1025/2 BW (JP09461/1)
- cl i 1010/4 BW (JP09829/5)
- cl i 1035/2 BW (JP09462/1)
- cl i 1015/4 BW (JP09830/5)
- cl i 1008/2 ME (JP43131/0)
- cl i 1025/4 BW (JP09831/5)
- cl i 1008/2 M (JP43132/0)

CE 0197

JUNG PUMPEN G bH - I d ie . 4-6 33803 S ei hage , G a

13

452.12.1509 - 453.12.1509

EN 12050-1:2001
Station de relevage pour effluents contenant des matières fécales

i 108/2 ME (JP09347/5)	i 108/2 M (JP09346/5)
i 120/2 M (JP09877/5)	
i 300 E (JP09496/0)	
i 400 E (JP09770/5)	i 400 (JP00637/9)
i 400 E (JP09324/5)	i 400 (JP09322/9)
i 510/4 BW (JP09191/1)	i 525/2 BW (JP09194/1)
i 515/4 BW (JP09192/1)	i 535/2 BW (JP09195/1)
i 525/4 BW (JP09193/1)	i 508/2 ME (JP43128/0)
i 508/2 M (JP43129/0)	i 520/2 M (JP43130/0)
i 1010/4 BWE (JP09273/2)	i 1025/2 BW (JP09461/1)
i 1010/4 BW (JP09829/5)	i 1035/2 BW (JP09462/1)
i 1015/4 BW (JP09830/5)	i 1008/2 ME (JP43131/0)
i 1025/4 BW (JP09831/5)	i 1008/2 M (JP43132/0)
i 1020/2 M (JP43133/0)	
i 1210/4 BW (JP09168/2)	i 1225/2 BW (JP09171/2)
i 1215/4 BW (JP09169/2)	i 1235/2 BW (JP09172/2)
i 1225/4 BW (JP09170/2)	

C ec e e e age a i e de ea e e e e de a i e f ca e e de ea e c e a de a i e f ca e a de d i ea de ef e e .

R° ACTION AU FEU	NPD
° TANCH° IT° L EAU, ° TANCH° IT° L AIR	
- E a ch i ea	a i fai a
- ° a ch i a de	a i fai a
EFFICACIT° (PERFORMANCE DE RELEVAGE)	
- Ref e e de a i e ide	a i fai a
- Racc d de a	a i fai a
- D i e i i a e de c d i e d a a i	a i fai a
- D bi i	a i fai a
- Pa age ib e i a de i a a i	a i fai a
- V e i e i a	a i fai a
R° SISTANCE M° CANIQUE	
- Ca aci de ch ge e abi i c e e d c - ec e e i i a i e ie de b i e	NPD
- S abi i c e e d c ec e e i i a i i ie de b i e	a i fai a
NIVEAU SONORE	t 70 dB(A)
R° SISTANCE	
- de a abi i c e e	a i fai a
- de a f a ce de e e age	a i fai a
- de a i a ce ca i e	a i fai a
SUBSTANCES DANGEREUSES	NPD

CE 0197

JUNG PUMPEN G bH - I d ie . 4-6 33803 S ei hage , G a

13

452.12.1509 - 453.12.1509

EN 12050-1:2001
Stazione di sollevamento per acque reflue contenenti materiale fecale

i 108/2 ME (JP09347/5)	i 108/2 M (JP09346/5)
i 120/2 M (JP09877/5)	
i 300 E (JP09496/0)	
i 400 E (JP09770/5)	i 400 (JP00637/9)
i 400 E (JP09324/5)	i 400 (JP09322/9)
i 510/4 BW (JP09191/1)	i 525/2 BW (JP09194/1)
i 515/4 BW (JP09192/1)	i 535/2 BW (JP09195/1)
i 525/4 BW (JP09193/1)	i 508/2 ME (JP43128/0)
i 508/2 M (JP43129/0)	i 520/2 M (JP43130/0)
i 1010/4 BWE (JP09273/2)	i 1025/2 BW (JP09461/1)
i 1010/4 BW (JP09829/5)	i 1035/2 BW (JP09462/1)
i 1015/4 BW (JP09830/5)	i 1008/2 ME (JP43131/0)
i 1025/4 BW (JP09831/5)	i 1008/2 M (JP43132/0)
i 1020/2 M (JP43133/0)	
i 1210/4 BW (JP09168/2)	i 1225/2 BW (JP09171/2)
i 1215/4 BW (JP09169/2)	i 1235/2 BW (JP09172/2)
i 1225/4 BW (JP09170/2)	

Racc a e e a e a ic di ac ef e i e di a e feca i e di ac ef e c e e i a e feca i a di a de i e di i ag

INFIAMMABILITÀ	NPD
IMPERMEABILITÀ, ERMETICITÀ ALL ARIA	
- eabi	S a
- E ici ag i di	S a
EFFICACIA (CAPACITÀ DI SOLLEVAMENTO)	
- P aggi di a ia i idi	S a
- C ega e i a b	S a
- Mi e i e de e i ee di e i a i e	S a
- Ve ci di c e i a	S a
- Pa aggi ib i de ia	S a
- V e i e i	S a
RESISTENZA MECCANICA	
- Ca aci di c ic e abi a e de ba i di acc a a di f i deg i edifici	NPD
- S abi a e de ba i di acc a a i deg i edifici.	S a
SOGLIA DI RUMOROSITÀ	t 70 dB(A)
DUREVOLEZZA	
- de a abi a e	S a
- de a ca aci di e e	S a
- de e i e a ecca ica	S a
SOSTANZE PERICOLOSE	NPD

CE 0197

JUNG PUMPEN G bH - I d ie . 4-6 33803 S ei hage , G a

13

452.12.1509 - 453.12.1509

EN 12050-1:2001
Spildevandsløfteanlæg

i 108/2 ME (JP09347/5)	i 108/2 M (JP09346/5)
i 120/2 M (JP09877/5)	
i 300 E (JP09496/0)	
i 400 E (JP09770/5)	i 400 (JP00637/9)
i 400 E (JP09324/5)	i 400 (JP09322/9)
i 510/4 BW (JP09191/1)	i 525/2 BW (JP09194/1)
i 515/4 BW (JP09192/1)	i 535/2 BW (JP09195/1)
i 525/4 BW (JP09193/1)	i 508/2 ME (JP43128/0)
i 508/2 M (JP43129/0)	i 520/2 M (JP43130/0)
i 1010/4 BWE (JP09273/2)	i 1025/2 BW (JP09461/1)
i 1010/4 BW (JP09829/5)	i 1035/2 BW (JP09462/1)
i 1015/4 BW (JP09830/5)	i 1008/2 ME (JP43131/0)
i 1025/4 BW (JP09831/5)	i 1008/2 M (JP43132/0)
i 1020/2 M (JP43133/0)	
i 1210/4 BW (JP09168/2)	i 1225/2 BW (JP09171/2)
i 1215/4 BW (JP09169/2)	i 1235/2 BW (JP09172/2)
i 1225/4 BW (JP09170/2)	

S i g g a i k f i g af i de a d de f ka i g i de a d ed f ka i e e i ea

BRANDADF RD	NPD
VANDT THED, LUFTT THED	
- Va d hed	Be e
- L g hed	Be e
EFFEKTIVITET (L FTEVIRKNING)	
- P i g af fa e ff	Be e
- R i i g	Be e
- Mi f e i a i ka a	Be e
- Mi . f deha ighed	Be e
- A gge f ie i ge a ga g	Be e
- Mi . e e	Be e
MEKANISK STYRKE	
- S ebeh de e b ee e g k e e abi e i a e de e de f b g i g	NPD
- S ebeh de e b ee e g k e e abi e i a e de e i b g i g	Be e
ST JNIVEAU	t 70 dB(A)
HOLDBARHED	
- k e abi e	Be e
- f e i k i g	Be e
eka i k ke	Be e
FARLIGE SUBSTANSER	NPD

CE 0197

JUNG PUMPEN GmbH - Industriestr. 4-6 33803 Steinhagen, Germany

13

452.12.1509 - 453.12.1509

EN 12050-1:2001
Fekalieuppfordringsanläggning

- [x] i 108/2 ME (JP09347/5)
- [x] i 108/2 M (JP09346/5)
- [x] i 120/2 M (JP09877/5)
- [x] i 300 E (JP09496/0)

- [x] i 400 E (JP09770/5)
- [x] i 400 (JP00637/9)
- [x] i 400 E (JP09324/5)
- [x] i 400 (JP09322/9)

- [x] i 510/4 BW (JP09191/1)
- [x] i 525/2 BW (JP09194/1)
- [x] i 515/4 BW (JP09192/1)
- [x] i 535/2 BW (JP09195/1)
- [x] i 525/4 BW (JP09193/1)
- [x] i 508/2 ME (JP43128/0)
- [x] i 508/2 M (JP43129/0)
- [x] i 520/2 M (JP43130/0)

- [x] i 1010/4 BWE (JP09273/2)
- [x] i 1025/2 BW (JP09461/1)
- [x] i 1010/4 BW (JP09829/5)
- [x] i 1035/2 BW (JP09462/1)
- [x] i 1015/4 BW (JP09830/5)
- [x] i 1008/2 ME (JP43131/0)
- [x] i 1025/4 BW (JP09831/5)
- [x] i 1008/2 M (JP43132/0)
- [x] i 1020/2 M (JP43133/0)

- [x] i 1210/4 BW (JP09168/2)
- [x] i 1225/2 BW (JP09171/2)
- [x] i 1215/4 BW (JP09169/2)
- [x] i 1235/2 BW (JP09172/2)
- [x] i 1225/4 BW (JP09170/2)

Spillvatten med fekalieinnehåll från toalett och fekalieinnehållande avlopp från badkar, dusch

CE 0197

JUNG PUMPEN GmbH - Industriestr. 4-6 33803 Steinhagen, Germany

13

452.12.1509 - 453.12.1509

EN 12050-1:2001
Käymäläjäteveden nostolaite

- [x] i 108/2 ME (JP09347/5)
- [x] i 108/2 M (JP09346/5)
- [x] i 120/2 M (JP09877/5)
- [x] i 300 E (JP09496/0)

- [x] i 400 E (JP09770/5)
- [x] i 400 (JP00637/9)
- [x] i 400 E (JP09324/5)
- [x] i 400 (JP09322/9)

- [x] i 510/4 BW (JP09191/1)
- [x] i 525/2 BW (JP09194/1)
- [x] i 515/4 BW (JP09192/1)
- [x] i 535/2 BW (JP09195/1)
- [x] i 525/4 BW (JP09193/1)
- [x] i 508/2 ME (JP43128/0)
- [x] i 508/2 M (JP43129/0)
- [x] i 520/2 M (JP43130/0)

- [x] i 1010/4 BWE (JP09273/2)
- [x] i 1025/2 BW (JP09461/1)
- [x] i 1010/4 BW (JP09829/5)
- [x] i 1035/2 BW (JP09462/1)
- [x] i 1015/4 BW (JP09830/5)
- [x] i 1008/2 ME (JP43131/0)
- [x] i 1025/4 BW (JP09831/5)
- [x] i 1008/2 M (JP43132/0)
- [x] i 1020/2 M (JP43133/0)

- [x] i 1210/4 BW (JP09168/2)
- [x] i 1225/2 BW (JP09171/2)
- [x] i 1215/4 BW (JP09169/2)
- [x] i 1235/2 BW (JP09172/2)
- [x] i 1225/4 BW (JP09170/2)

Harmaa jäteveden ja käymäläjäteveden keräilyyn ja jaossa käytettävä laite

BRAND	NPD
VATTENTÄTHET, LUFTTÄTHET	
- Vattentäthet	Godkänd
- Lufttäthet	Godkänd
VERKAN (UPPFORDRINGSVERKAN)	
- Maximal fallhöjd	Godkänd
- Rörstorlek	Godkänd
- Lägsta tillåtna anslutningsdiameter	Godkänd
- Lägsta flödeshastighet	Godkänd
- Största tillåtna temperatur	Godkänd
- Lägsta tillåtna	Godkänd
MEKANISK HÅLLFASTHET	
- Bärförmåga och åtkomlighet för kontrollerbara avstängningsventiler	NPD
- Säkerhet för kontrollerbara avstängningsventiler	Godkänd
BULLERNIVÅ	≤ 70 dB(A)
HÅLLBARHET	
- Det kontrollerbara avstängningsventiler	Godkänd
- förpackning	Godkänd
- Det fekalieinkapslade	Godkänd
FARLIGA SUBSTANSER	NPD

KÄYTTÄYTYMINEN TULIPALOSSA	NPD
VESITIIVIYS, ILMATIIVIYS	
- Vesitiivis	Hyväksytty
- Ilmatiivis	Hyväksytty
TEHO (NOSTOVAIKUTUS)	
- Kiinteiden aineiden läpäisy	Hyväksytty
- Putkikoko	Hyväksytty
- Laskuputken liitäntäkoko	Hyväksytty
- Virtausnopeus	Hyväksytty
- Laitteen suurin sallittu lämpötila	Hyväksytty
- Virtauksen rajoitin	Hyväksytty
MEKAANINEN KESTÄVYYS	
- Kuormituskapasiteetti ja asennettavuus sulkuventtiileille	NPD
- Kuormituskapasiteetti ja asennettavuus	Hyväksytty
MELUTASO	≤ 70 dB(A)
KESTÄVYYS	
- Rakenteen eristys	Hyväksytty
- Näköaukko	Hyväksytty
- Mekaaninen lujuus	Hyväksytty
VAARALLISET AINEET	NPD

CE 0197

JUNG PUMPEN GmbH - Industriestr. 4-6 33803 Steinhagen, Germany

13

452.12.1509 - 453.12.1509

EN 12050-1:2001
Instalacja przepompowni fekaliów

- i 108/2 ME (JP09347/5)
- i 108/2 M (JP09346/5)
- i 120/2 M (JP09877/5)
- i 300 E (JP09496/0)

- i 400 E (JP09770/5)
- i 400 (JP00637/9)
- i 400 E (JP09324/5)
- i 400 (JP09322/9)

- i 510/4 BW (JP09191/1)
- i 525/2 BW (JP09194/1)
- i 515/4 BW (JP09192/1)
- i 535/2 BW (JP09195/1)
- i 525/4 BW (JP09193/1)
- i 508/2 ME (JP43128/0)
- i 508/2 M (JP43129/0)
- i 520/2 M (JP43130/0)

- i 1010/4 BWE (JP09273/2)
- i 1025/2 BW (JP09461/1)
- i 1010/4 BW (JP09829/5)
- i 1035/2 BW (JP09462/1)
- i 1015/4 BW (JP09830/5)
- i 1008/2 ME (JP43131/0)
- i 1025/4 BW (JP09831/5)
- i 1008/2 M (JP43132/0)

CE 0197

JUNG PUMPEN G bH - I d ie . 4-6 33803 S ei hage , G a

13

452.12.1509 - 453.12.1509

EN 12050-1:2001
Čerpacie stanice odpadových vôd s obsahom fekálnych splaškov

i 108/2 ME (JP09347/5)	i 108/2 M (JP09346/5)
i 120/2 M (JP09877/5)	
i 300 E (JP09496/0)	
i 400 E (JP09770/5)	i 400 (JP00637/9)
i 400 E (JP09324/5)	i 400 (JP09322/9)
i 510/4 BW (JP09191/1)	i 525/2 BW (JP09194/1)
i 515/4 BW (JP09192/1)	i 535/2 BW (JP09195/1)
i 525/4 BW (JP09193/1)	i 508/2 ME (JP43128/0)
i 508/2 M (JP43129/0)	i 520/2 M (JP43130/0)
i 1010/4 BWE (JP09273/2)	i 1025/2 BW (JP09461/1)
i 1010/4 BW (JP09829/5)	i 1035/2 BW (JP09462/1)
i 1015/4 BW (JP09830/5)	i 1008/2 ME (JP43131/0)
i 1025/4 BW (JP09831/5)	i 1008/2 M (JP43132/0)
i 1020/2 M (JP43133/0)	
i 1210/4 BW (JP09168/2)	i 1225/2 BW (JP09171/2)
i 1215/4 BW (JP09169/2)	i 1235/2 BW (JP09172/2)
i 1225/4 BW (JP09170/2)	

Zb a a a ick ° a ie d ad ch d be fek ch a d ad ch d b ah fek ch a k ed e d ia

REAKCIA PO AS POLIARU	NPD
VODOTESNOS , VZDUCHOTESNOS	
- d e	iadk
- ach be e	iadk
INNOS (INOK SANIA)	
- d a a e ch° a c	iadk
- b jk	iadk
i i e ac ch ede	iadk
i i a ch ie k	iadk
- i iech d	iadk
i i k bja	iadk
MECHANICK PEVNOS	
- a abi a b ej d b e a ie b d	NPD
- a abi a b ej d b e a ie ci b d	iadk
HLADINA HLUKU	t 70 dB (A)
TRVANLIVOS	
- ej abi	iadk
- ed aj ch i k	iadk
echa ickej e i	iadk
NEBEZPE N° L TKY	NPD

CE 0197

JUNG PUMPEN G bH - I d ie . 4-6 33803 S ei hage , G a

13

452.12.1509 - 453.12.1509

EN 12050-1:2001
Fekáliatartalmú szennyvizek átemelői

i 108/2 ME (JP09347/5)	i 108/2 M (JP09346/5)
i 120/2 M (JP09877/5)	
i 300 E (JP09496/0)	
i 400 E (JP09770/5)	i 400 (JP00637/9)
i 400 E (JP09324/5)	i 400 (JP09322/9)
i 510/4 BW (JP09191/1)	i 525/2 BW (JP09194/1)
i 515/4 BW (JP09192/1)	i 535/2 BW (JP09195/1)
i 525/4 BW (JP09193/1)	i 508/2 ME (JP43128/0)
i 508/2 M (JP43129/0)	i 520/2 M (JP43130/0)
i 1010/4 BWE (JP09273/2)	i 1025/2 BW (JP09461/1)
i 1010/4 BW (JP09829/5)	i 1035/2 BW (JP09462/1)
i 1015/4 BW (JP09830/5)	i 1008/2 ME (JP43131/0)
i 1025/4 BW (JP09831/5)	i 1008/2 M (JP43132/0)
i 1020/2 M (JP43133/0)	
i 1210/4 BW (JP09168/2)	i 1225/2 BW (JP09171/2)
i 1215/4 BW (JP09169/2)	i 1235/2 BW (JP09172/2)
i 1225/4 BW (JP09170/2)	

Fek ia e e e fek ia a e g t e e- e a i a d i i fe e

VISELKED° S TŤ Z ESET° N	NPD
V Z LL S G, L° G TERESZT° S	
- V g	Megfe e
- S a e g	Megfe e
HAT° KONYS G (EMEL HAT S)	
- S i d a ag k a	Megfe e
- C c a ak k	Megfe e
- A e e kek i i i e ei	Megfe e
- A a i i i ebe ge	Megfe e
- A b e de abad i i i e e	Megfe e
- Mi i i ha e	Megfe e
MECHANIKAI SZIL RDS G	
- A g t he he ge abi i a e eke k i ha a h	NPD
- A g t abi i a e eke be i ha a h	Megfe e
ZAJSZINT	t 70 dB(A)
TART SS G	
- a abi i a ga	Megfe e
- a e ha a ga	Megfe e
- a echa ikai i d g a ga	Megfe e
VESZ° LYES ANYAGOK	NPD

CE 0197

JUNG PUMPEN G bH - I d ie . 4-6 33803 S ei hage , G a 13

452.12.1509 - 453.12.1509

EN 12050-1:2001
Stație de pompare ape uzate cu materii fecale

i 108/2 ME (JP09347/5)	i 108/2 M (JP09346/5)
i 120/2 M (JP09877/5)	
i 300 E (JP09496/0)	
i 400 E (JP09770/5)	i 400 (JP00637/9)
i 400 E (JP09324/5)	i 400 (JP09322/9)
i 510/4 BW (JP09191/1)	i 525/2 BW (JP09194/1)
i 515/4 BW (JP09192/1)	i 535/2 BW (JP09195/1)
i 525/4 BW (JP09193/1)	i 508/2 ME (JP43128/0)
i 508/2 M (JP43129/0)	i 520/2 M (JP43130/0)
i 1010/4 BWE (JP09273/2)	i 1025/2 BW (JP09461/1)
i 1010/4 BW (JP09829/5)	i 1035/2 BW (JP09462/1)
i 1015/4 BW (JP09830/5)	i 1008/2 ME (JP43131/0)
i 1025/4 BW (JP09831/5)	i 1008/2 M (JP43132/0)
i 1020/2 M (JP43133/0)	
i 1210/4 BW (JP09168/2)	i 1225/2 BW (JP09171/2)
i 1215/4 BW (JP09169/2)	i 1235/2 BW (JP09172/2)
i 1225/4 BW (JP09170/2)	

C ec ea j ea a a de a e a e f a ii feca e j a e a e c a ii feca e dea a i e a i ibi a a e a e di i e de ca a i e

COMPORTAMENTUL N CAZ DE INCENDIU	NPD
IMPERMEABILITATE LA AP , ETAN EITATE LA AER	
- eabi a e a a	Re
- E a ei a e a i	Re
EFICACITATE (EFICIEN DE POMPARE)	
- a de a ia e ide	Re
- Rac d i ea	Re
- D e i i e a e c d e de e i e	Re
- Vi e a de c g e i	Re
- ec ea i ibe a i a a iei	Re
- Ca aci a e i i abi i	Re
REZISTEN A MECANIC	
- Ca aci a ea a i abi a ea a e e - i c ec e i i e ea a c i	NPD
- S abi a ea a e e i c ec e i i e ea i c i	Re
NIVEL DE ZGOMOT	70 dB(A)
DURABILITATEA	
- S abi a ea a	Re
- Eficie de e	Re
- Re i e a eca ic	Re
SUBSTAN E PERICULOASE	NPD

PENTAIR **JUNG PUMPEN**

EU-Konformitätserklärung
EU-Prohlášeni o shodě
EU-Overensstemmelseserklæring
EU-Declaration of Conformity
EU-Vaatimustenmukaisuusvakuutus

EU-Déclaration de Conformité
EU-Megfelelőségi nyilatkozat
EU-Dichiarazione di conformità
EU-Conformiteitsverklaring
EU-Deklaracja zgodności

EU-Declarație de conformitate
EU-Vyhlásenie o zhode
EU-Försäkran om överensstämmelse

DE · Richtlinien - Harmonisierte Normen
CS · Směrnice - Harmonizované normy
DA · Direktiv - Harmoniseret standard
EN · Directives - Harmonised standards
FI · Direktiivi - Yhdenmukaistettu standardi
FR · Directives - Normes harmonisées
HU · Irányelve - Harmonizá szabványok
IT · Direttive - Norme armonizzate
NL · Richtlijnen - Geharmoniseerde normen
PL · Dyrektywy - Normy zharmonizowane
RO · Directivă - Norme coroborate
SK · Smernice - Harmonizované normy
SV · Direktiv - Harmoniserade normer

• **2006/42/EG**	(MD)	**EN 809:1998/AC:2010, EN ISO 12100:2010, EN 60335-1:2012/AC:2014**
• **2011/65/EU**	(RoHS)	
• **2014/30/EU**	(EMC)	**EN 55014-1:2006/A2:2011, EN 55014-2:1997/A2:2008, EN 61000-3-2:2014, EN 61000-3-3:2013**
• **2014/34/EU**	(ATEX)	**EN 1127-1:2011**

JUNG PUMPEN GmbH - Industriestr. 4-6 - 33803 Steinhagen - Germany - www.jung-pumpen.de

DE · Wir erklären in alleiniger Verantwortung, dass das Produkt den aufgeführten Richtlinien entspricht.
CS · Prohlašujeme na svou výlučnou odpovědnost, že výrobek odpovídá jmenovaným směrnicím.
DA · Vi erklærer under ansvar at produktet i overensstemmelse med de retningslinjer
EN · We hereby declare, under our sole responsibility, that the product is in accordance with the specified Directives.
FI · Me vakuutamme omalla vastuullamme, että tuote täyttää ohjeita.
FR · Nous déclarons sous notre propre responsabilité que le produit répond aux directives.
HU · Kizárólagos felelősségünk tudatában kijelentjük, hogy ez a termék megfelel az Európai Unió fentnevezett irányelveinek.
IT · Noi dichiariamo sotto la nostra esclusiva responsabilità che il prodotto è conforme alle direttive citate
NL · Wij verklaren geheel onder eigen verantwoordelijkheid dat het product voldoet aan de gestelde richtlijnen.
PL · Z pełną odpowiedzialnością oświadczamy, że produkt odpowiada postanowieniom wymienionych dyrektyw.
RO · Declarăm pe proprie răspundere că produsul corespunde normelor prevăzute de directivele mai sus menționate.
SK · Na výlučnú zodpovednosť vyhlasujeme, že výrobok spĺňa požiadavky uvedených smerníc.
SV · Vi försäkrar att produkten på vårt ansvar är utförd enligt gällande riktlinjer.

compli 300 E (JP09496/0)
compli 400 E (JP09770/5)
compli 400 E (JP09324/5)
compli 400 (JP00637/9)
compli 400 (JP09322/9)
compli 510/4 BW (JP09191/1)
compli 515/4 BW (JP09192/1)
compli 525/4 BW (JP09193/1)
compli 525/2 BW (JP09194/1)
compli 535/2 BW (JP09195/1)
compli 108/2 ME (JP09347/5)
compli 108/2 M (JP09346/5)
compli 120/2 M (JP09877/5)
compli 508/2 ME (JP43128/0)
compli 508/2 M (JP43129/0)
compli 520/2 M (JP43130/0)

DE · Weitere normative Dokumente CS · Jinými normativními dokumenty DA · Andre normative dokumenter EN · Other normative documents FI · Muiden normien FR · Autres documents normatifs HU · Egyéb szabályozó dokumentumokban leírtaknak IT · Altri documenti normativi NL · Verdere normatieve documenten PL · Innymi dokumentami normatywnymi RO · Alte acte normative SV · Vidare normerande dokument SK · Iným záväzným dokumentom:

EN 50274:2002/AC:2009,
EN 60335-2-41:2003/A2:2010,
TRBS 2153, CLC/TR 50404

DE · Bevollmächtigter für technische Dokumentation CS · Oprávněná osoba pro technickou dokumentaci DA · Autoriseret person for teknisk dokumentation EN · Authorized person for technical documentation FI · Valtuutettu henkilö tekninen dokumentaatio FR · Personne autorisée à la documentation technique HU · Hivatalos személy műszaki dokumentáció IT · Persona abilitata per la documentazione tecnica NL · Bevoegd persoon voor technische documentatie PL · Pełnomocnik ds. dokumentacji technicznej RO · Persoană autorizată pentru documentatiei tehnice SV · Auktoriserad person för teknisk dokumentation SK · Oprávnená osoba pre technickú dokumentáciu:

JUNG PUMPEN - Stefan Sirges - Industriestr. 4-6 - 33803 Steinhagen

Steinhagen, 10-01-2017

Stefan Sirges, General Manager

i.V.
Rüdiger Rokohl, Sales Manager

CE 352-13-1701

PENTAIR **JUNG PUMPEN**

EU-Konformitätserklärung
EU-Prohlášeni o shodě
EU-Overensstemmelseserklæring
EU-Declaration of Conformity
EU-Vaatimustenmukaisuusvakuutus

EU-Déclaration de Conformité
EU-Megfelelöségi nyilatkozat
EU-Dichiarazione di conformità
EU-Conformiteitsverklaring
EU-Deklaracja zgodności

EU-Declarație de conformitate
EU-Vyhlásenie o zhode
EU-Försäkran om överensstämmelse

DE · Richtlinien - Harmonisierte Normen
CS · Směrnice - Harmonizované normy
DA · Direktiv - Harmoniseret standard
EN · Directives - Harmonised standards
FI · Direktiivi - Yhdenmukaistettu standardi
FR · Directives - Normes harmonisées
HU · Irányelve - Harmonizá szabványok
IT · Direttive - Norme armonizzate
NL · Richtlijnen - Geharmoniseerde normen
PL · Dyrektywy - Normy zharmonizowane
RO · Directivă - Norme coroborate
SK · Smernice - Harmonizované normy
SV · Direktiv - Harmoniserade normer

• **2006/42/EG**	(MD)	**EN 809:1998/AC:2010, EN ISO 12100:2010, EN 60335-1:2012/AC:2014**
• **2011/65/EU**	(RoHS)	
• **2014/30/EU**	(EMC)	**EN 55014-1:2006/A2:2011, EN 55014-2:1997/A2:2008, EN 61000-3-2:2014, EN 61000-3-3:2013**
• **2014/34/EU**	(ATEX)	**EN 1127-1:2011**

JUNG PUMPEN GmbH - Industriestr. 4-6 - 33803 Steinhagen - Germany - www.jung-pumpen.de

DE · Wir erklären in alleiniger Verantwortung, dass das Produkt den aufgeführten Richtlinien entspricht.
CS · Prohlašujeme na svou výlučnou odpovědnost, že výrobek odpovídá jmenovaným směrnicím.
DA · Vi erklærer under ansvar at produktet i overensstemmelse med de retningslinjer
EN · We hereby declare, under our sole responsibility, that the product is in accordance with the specified Directives.
FI · Me vakuutamme omalla vastuullamme, että tuote täyttää ohjeita.
FR · Nous déclarons sous notre propre responsabilité que le produit répond aux directives.
HU · Kizárólagos felelősségünk tudatában kijelentjük, hogy ez a termék megfelel az Európai Unió fentnevezett irányelveinek.
IT · Noi dichiariamo sotto la nostra esclusiva responsabilità che il prodotto è conforme alle direttive citate
NL · Wij verklaren geheel onder eigen verantwoordelijkheid dat het product voldoet aan de gestelde richtlijnen.
PL · Z pełną odpowiedzialnością oświadczamy, że produkt odpowiada postanowieniom wymienionych dyrektyw.
RO · Declarăm pe proprie răspundere că produsul corespunde normelor prevăzute de directivele mai sus menționate.
SK · Na výlučnú zodpovednosť vyhlasujeme, že výrobok spĺňa požiadavky uvedených smerníc.
SV · Vi försäkrar att produkten på vårt ansvar är utförd enligt gällande riktlinjer.

compli 1010/4 BWE (JP09273/2)
compli 1010/4 BW (JP09829/5)
compli 1015/4 BW (JP09830/5)
compli 1025/4 BW (JP09831/5)
compli 1025/2 BW (JP09461/1)
compli 1035/2 BW (JP09462/1)
compli 1008/2 ME (JP43131)
compli 1008/2 M (JP43132)
compli 1020/2 M (JP43133)
compli 1210/4 BW (JP09168/2)
compli 1215/4 BW (JP09169/2)
compli 1225/4 BW (JP09170/2)
compli 1225/2 BW (JP09171/2)
compli 1235/2 BW (JP09172/2)
compli 1525/4 C1 (JP09181/1)
compli 1535/4 C1 (JP09182/1)
compli 1555/4 C5 (JP09183/1)
compli 1575/4 C5 (JP09184/1)
compli 1575/4 B6 (JP09185/1)
compli 1535/2 B2 (JP45933)
compli 1555/2 B2 (JP45934)
compli 1575/2 B5 (JP45141/1)
compli 15100/2 B5 (JP45142/1)
compli 15200/2 B6 (JP45935)
compli 2525/4 C1 (JP09186/1)
compli 2535/4 C1 (JP09187/1)
compli 2555/4 C5 (JP09188/1)
compli 2575/4 C5 (JP09189/1)
compli 2575/4 B6 (JP09190/1)
compli 2535/2 B2 (JP45936)
compli 2555/2 B2 (JP45937)
compli 2575/2 B5 (JP45938)
compli 25100/2 B5 (JP45939)
compli 25200/2 B6 (JP45940)

DE · Weitere normative Dokumente CS · Jinými normativními dokumenty DA · Andre normative dokumenter EN · Other normative documents FI · Muiden normien FR · Autres documents normatifs HU · Egyéb szabályozó dokumentumokban leírtaknak IT · Altri documenti normativi NL · Verdere normatieve documenten PL · Innymi dokumentami normatywnymi RO · Alte acte normative SV · Vidare normerande dokument SK · Iným záväzným dokumentom:

EN 50274:2002/AC:2009,
EN 60335-2-41:2003/A2:2010,
TRBS 2153, CLC/TR 50404

DE · Bevollmächtigter für technische Dokumentation CS · Oprávněná osoba pro technickou dokumentaci DA · Autoriseret person for teknisk dokumentation EN · Authorized person for technical documentation FI · Valtuutettu henkilö tekninen dokumentaatio FR · Personne autorisée à la documentation technique HU · Hivatalos személy műszaki dokumentáció IT · Persona abilitata per la documentazione tecnica NL · Bevoegd persoon voor technische documentatie PL · Pełnomocnik ds. dokumentacji technicznej RO · Persoană autorizată pentru documentatiei tehnice SV · Auktoriserad person för teknisk dokumentation SK · Oprávnená osoba pre technickú dokumentáciu:

JUNG PUMPEN - Stefan Sirges - Industriestr. 4-6 - 33803 Steinhagen

Steinhagen, 10-01-2017

Stefan Sirges, General Manager

i.V.
Rüdiger Rokohl, Sales Manager

CE 353-14-1701

JUNG PUMPEN G bH - I d ie . 4-6 - 33803 S ei hage - De ch a d
Te . +49 5204 170 - Fa +49 5204 80368 - eMai kd@j g- e .de

PENTAIR WATER ITALY S - Via Ma acci , 13 - 56010 L g a - Pi a - L a ia
Te . +39 050 716 111 - Fa +39 050 716 801 - eMai : i f @j g- e .i

PENTAIR WATER POLSKA S . . . - . P 21 - 41-200 S iec - P ka
Te . +48 32 295 1200 - Fa +48 32 295 1201 i f .j g e @ e ai .c